n·gineric

a member of the HST Group

Torque and Force Measurement Systems

Sensor Torque Driver Systems

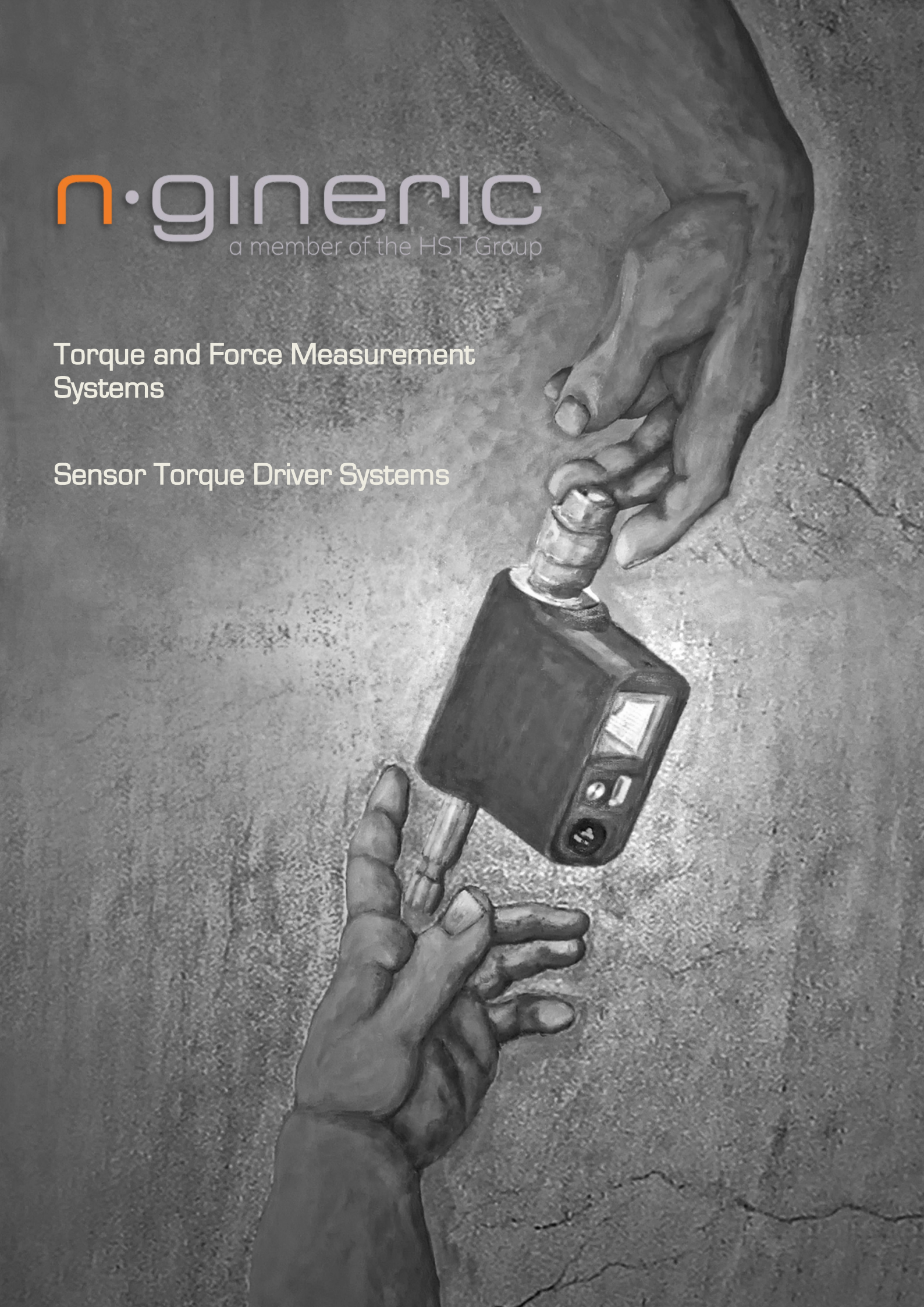

1 Software 4
1.1 Sensor System Software n-quirer TT V3 basic 4
1.2 Sensor System Software n-quirer TT V3 advanced 7
1.3 Torque Driver System Software n-quirer TD 12
1.4 Torque Driver System Software n-quirer TD advanced 20

2 Intelligent Torque Sensors 25
2.1 Rotary Torque/Angle Sensors ng-TTR-i 26
2.2 Rotary Torque/Angle Sensors ng-TTR-u 29
2.3 Rotary Torque/Angle Sensors ng-vTTR 38
2.4 Rotary Torque/Angle Sensors ng-eTTR 40
2.5 Stationary Torque Sensors ng-TTS-i 45
2.6 Stationary Torque Sensors ng-TTS-u 47
2.7 Stationary Torque Sensors ng-TTS-a 51
2.8 Handheld Torque Sensors ng-TTH-i 54
2.9 Handheld Torque Sensors ng-TTH-a 55

3 Intelligent Force Sensors 57
3.1 Compression Force Load Cells ng-FTS-bi 58
3.2 Compression Force Load Cells ng-FTS-di 60

4 Sensor Torque Driver Systems 62
4.1 Handheld Sensor Torque Drivers ng-µTDH 63
4.2 Handheld Sensor Torque Drivers ng-TDH 69
4.3 Handheld Sensor Measurement Drivers ng-TDHQ 76
4.4 Handheld Sensor Torque Drivers ng-eTDH 85
4.5 Stationary Sensor Torque Drivers ng-TDS 94
4.6 Stationary Sensor Measurement Drivers ng-TDSQ 105

5 Systems and Components for Automated Assembly 115
5.1 Blow Feeding Module ng-BF400 115
5.2 „Flying Handling“ Module ng-FLH400 116

6 Accessories 117
6.1 Sensor Interface ng-TC-ai 117
6.2 Interface Extension ng-eTTx 118
6.3 Mounting Assy 118
6.4 Screw Joint Simulator Sets 119

6.5 Torque Driver Controller Interface ng-TDC 120
6.6 Program selector switch ng-TD-PSW16 121
6.7 Carbon Telescopic Arm ng-TA900 121
6.8 Linear-Arm with position monitoring ng-LAP 122
6.9 Bit Selector and Tightening Position Controller ng-BPC 125
6.10 Foot Switch ng-Tx-FSW 125
6.11 Barcode Reader wireless ng-BCR 126
6.12 Cables 127
6.13 Power Supply Units 128
6.14 Vacuum Adapter Assemblies 129
6.15 Vacuum Nozzles 129
6.16 Screw Bits 130
6.17 Chuck Adapter Assy HM4–f-HEX6.35-m 130
6.18 Calibration Assy 131

1 Software

1.1 Sensor System Software n-quirer TT V3 basic

For tablet PCs, laptops, notebooks, PC running Windows, in combination with all intelligent sensors from n-gineric providing:

- Graph recordings of
  - Torque vs. time
  - Torque vs. angle
  - Force vs. time
  - Force vs. displacement

- Automatic sensor identification
- Graph reading with up to 2,000 measurements per second
- Display resolution 5 digits plus decimal point
- Supports different physical units
- 2 control windows with internal or external triggering
- 2nd trigger value for angle control or displacement control
- Adjustable low pass filter (10 Hz to 500 Hz)
- Supports the loading of a reference graph for comparison
- Direct export of the graph reading into Excel
- Direct export of measurements results listing into Excel with SPC document template
- Direct sensor connectivity via USB or Ethernet

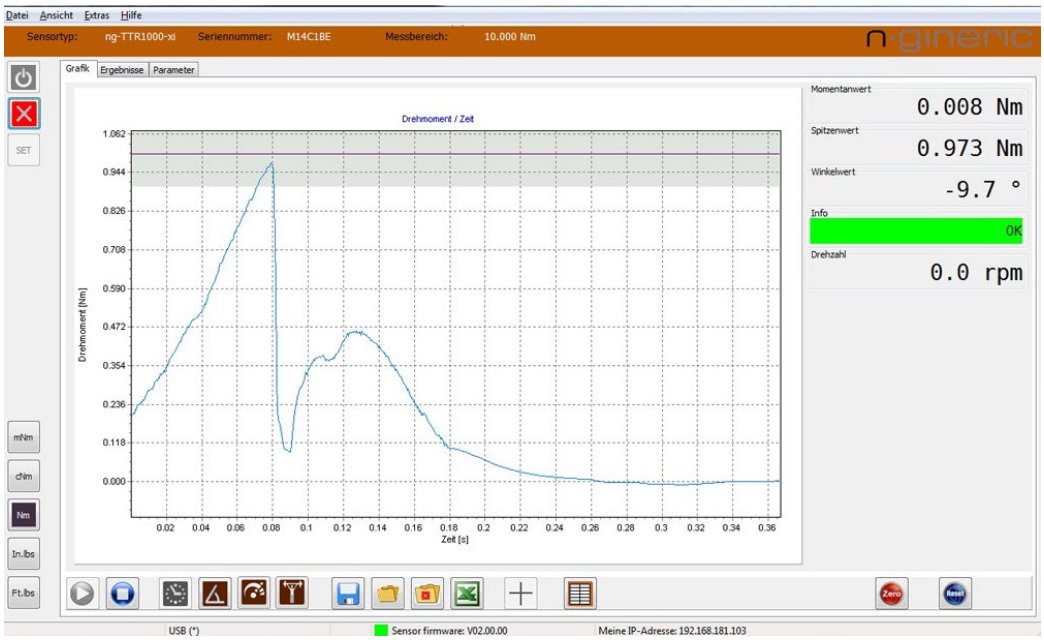

n-quirer TT V3 basic Graph

Date/Time:	26.05.13 17:43:20
Tool Serial Number:	M13F309
Y-Axis Unit:	cNm
X-Axis Unit:	s

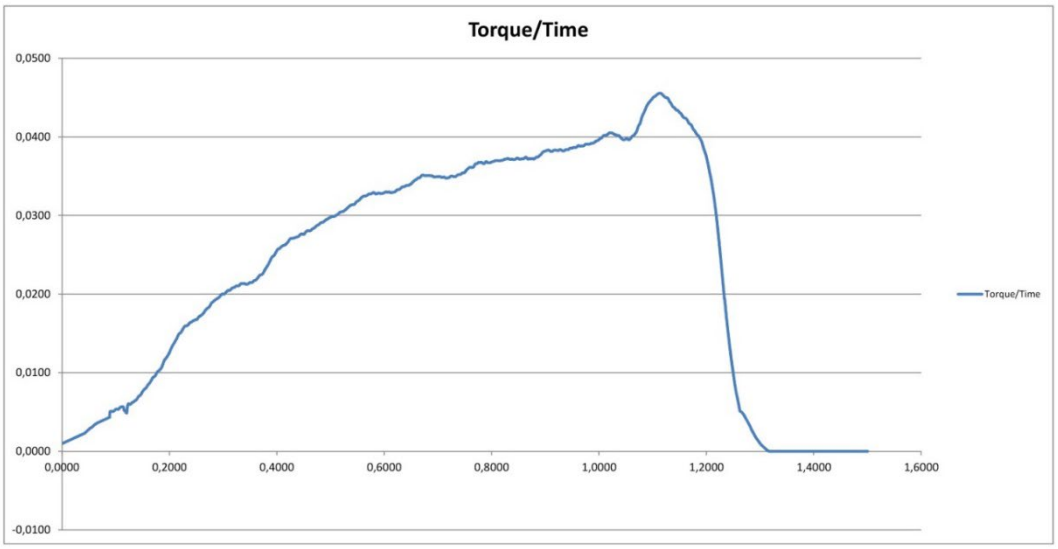

n-quirer TT V3 graph exported to Excel

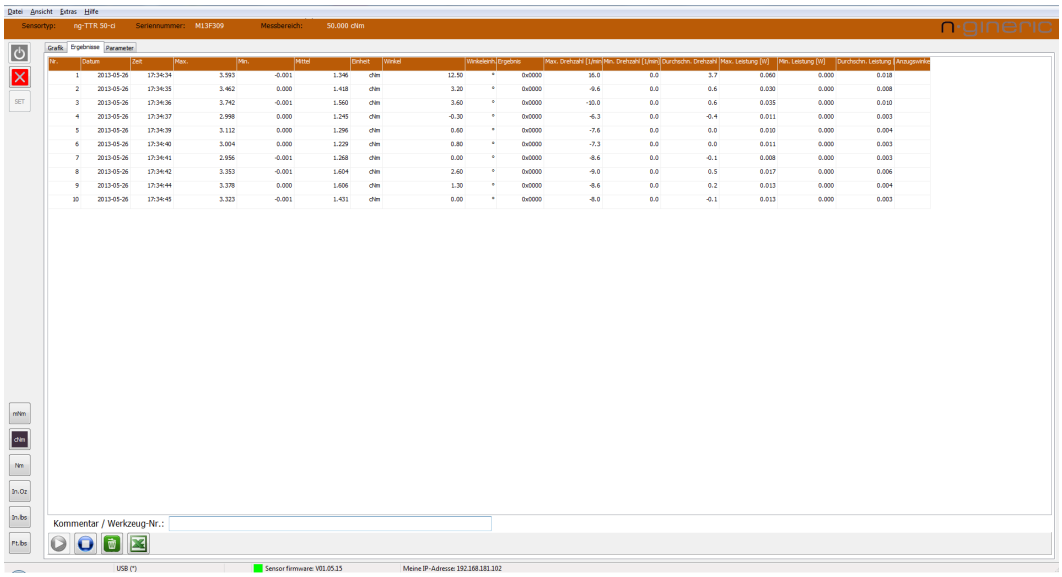

Nr.	Datum	Zeit	Max.	Min.	Mittel	Einheit	Winkel	Winkelerrh.	Ergebnis	Max. Drehzahl	Min. Drehzahl	Durchschn. Drehzahl	Max. Leistung [W]	Min. Leistung [W]	Durchschn. Leistung	Anzugswinkel
1	2013-05-26	17:34:34	3.593	-0.001	1.346	cNm	12.50	°	0x0000	16.0	0.0	3.7	0.060	0.000	0.018	
2	2013-05-26	17:34:35	3.462	0.000	1.418	cNm	3.20	°	0x0000	-9.6	0.0	0.6	0.030	0.000	0.008	
3	2013-05-26	17:34:36	3.742	-0.001	1.560	cNm	3.60	°	0x0000	-10.0	0.0	0.6	0.035	0.000	0.010	
4	2013-05-26	17:34:37	2.998	0.000	1.245	cNm	-0.30	°	0x0000	-6.3	0.0	-0.4	0.011	0.000	0.003	
5	2013-05-26	17:34:39	3.112	0.000	1.296	cNm	0.60	°	0x0000	-7.6	0.0	0.0	0.010	0.000	0.004	
6	2013-05-26	17:34:40	3.004	0.000	1.229	cNm	0.80	°	0x0000	-7.3	0.0	0.0	0.011	0.000	0.003	
7	2013-05-26	17:34:41	2.956	-0.001	1.268	cNm	0.00	°	0x0000	-8.6	0.0	-0.1	0.008	0.000	0.003	
8	2013-05-26	17:34:42	3.353	-0.001	1.604	cNm	2.60	°	0x0000	-9.0	0.0	0.5	0.017	0.000	0.006	
9	2013-05-26	17:34:44	3.378	0.000	1.606	cNm	1.30	°	0x0000	-8.6	0.0	0.2	0.013	0.000	0.004	
10	2013-05-26	17:34:45	3.323	-0.001	1.431	cNm	0.00	°	0x0000	-8.0	0.0	-0.1	0.013	0.000	0.003	

n-quirer TT V3 measurement results

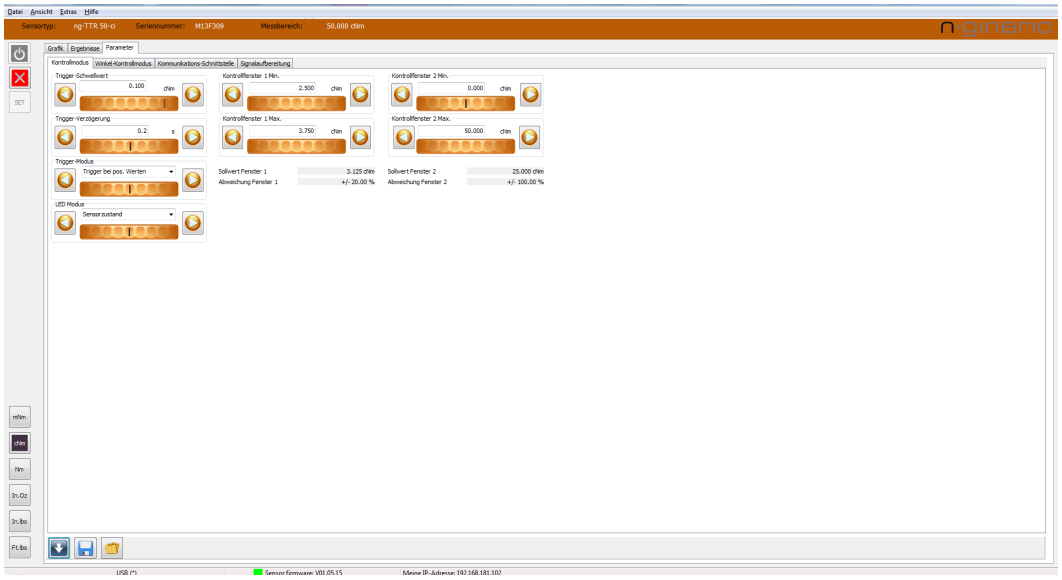

n-quirer TT V3 control mode tab sheet

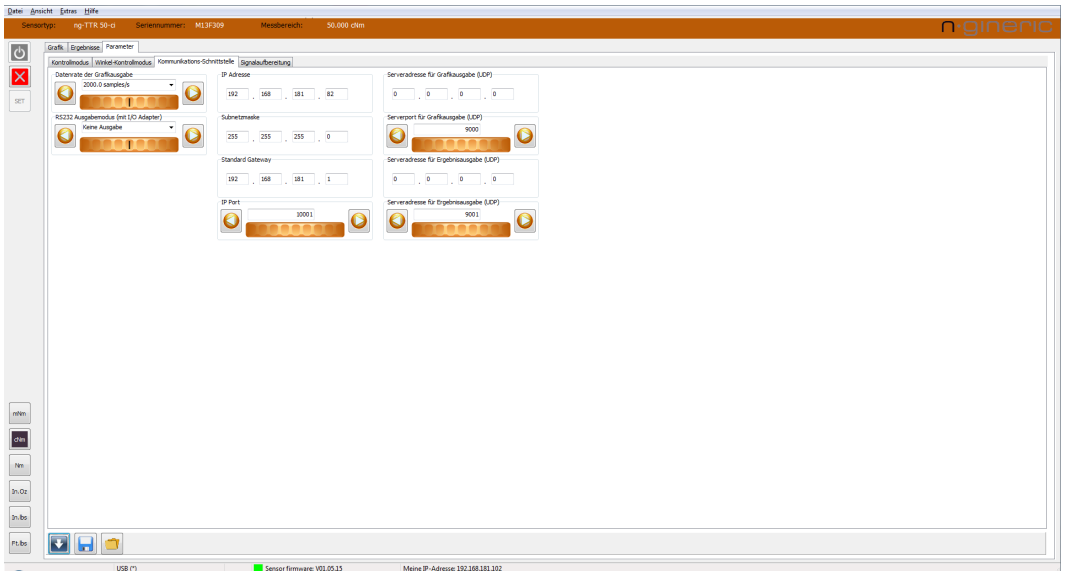

n-quirer TT V3 communication interface tab sheet

Requirements to the PC system:

- Operating system Windows 11
- Screen resolution at least 1280 x 680 pixels
- Microsoft Excel 2007 or later or compatible Office package

Article Number	01-01-00012-02

1.2 Sensor System Software n-quirer TT V3 advanced

For tablet PCs, laptops, notebooks, PC running Windows, in combination with all intelligent sensors from n-gineric, providing:

- Graph recordings of
  - Torque vs. time
  - Torque vs. angle
  - Force vs. time
  - Force vs. displacement
  - Speed vs. time
  - Speed vs. angle
  - Power vs. time
  - Power vs. Angle

- Automatic sensor identification
- Graph reading with up to 2,000 measurements per second
- Display resolution 5 digits plus decimal point
- Supports different physical units
- control windows with internal or external triggering
- 2nd trigger value for angle control or displacement control
- Adjustable low pass filter (10 Hz to 500 Hz)
- Supports the loading of a reference graph for comparison
- Direct export of the graph reading into Excel
- Direct export of measurements results listing into Excel with SPC document template
- Direct sensor connectivity via USB or Ethernet
- Cursor function with single values
- 2nd measurement display window (configurable)
- Barcode reader support for automatic loading of sensor configuration
- Supports a 2nd connected sensor with overlaid secondary graph ("n-clude-mode" e.g. for additional simultaneous measuring of the clamping force in a screw joint)

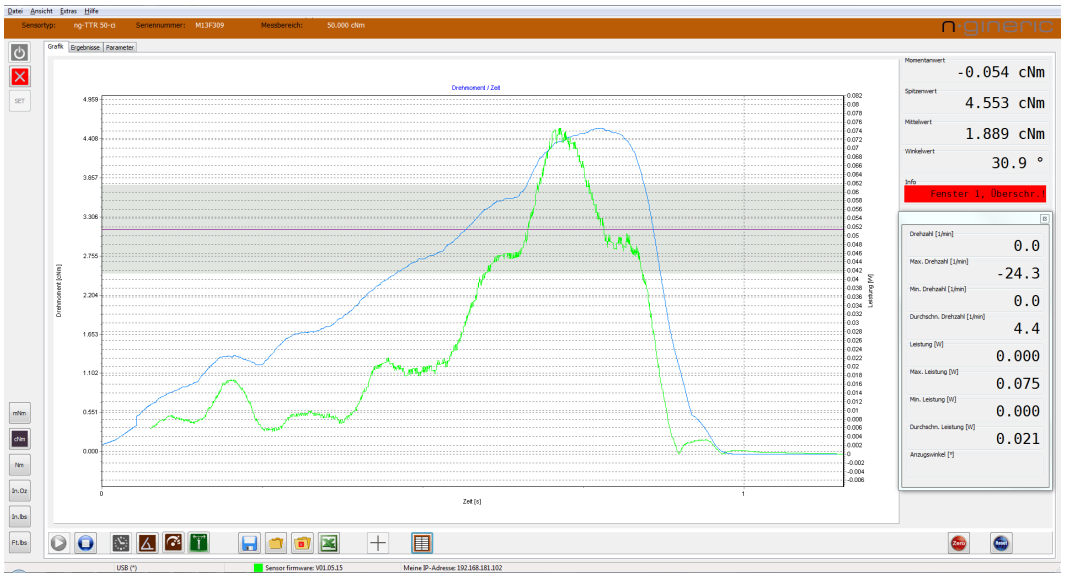

n-quirer TT V3 advanced Graph

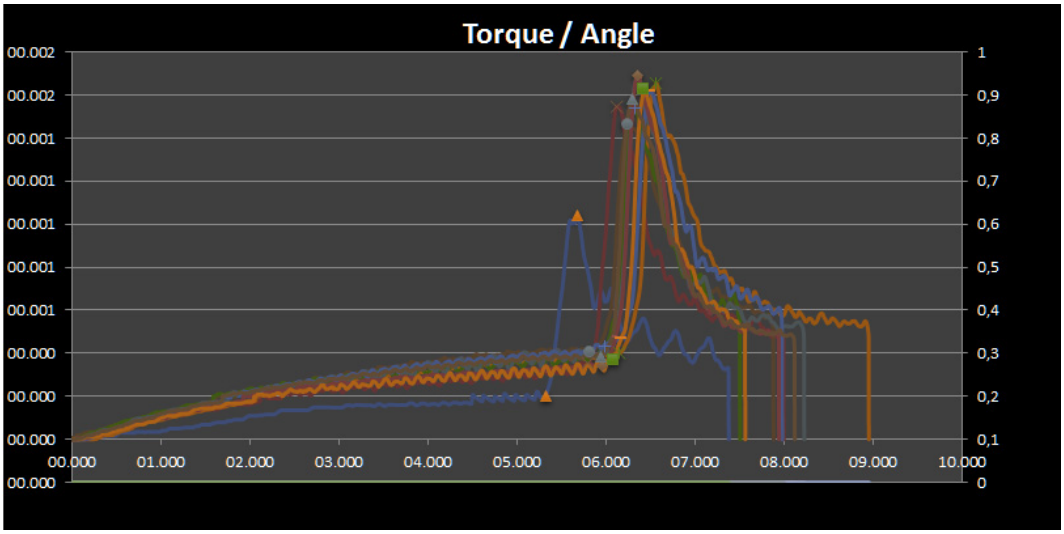

n-quirer TT V3 advanced Torque/Angle Signature Analysis report in Excel

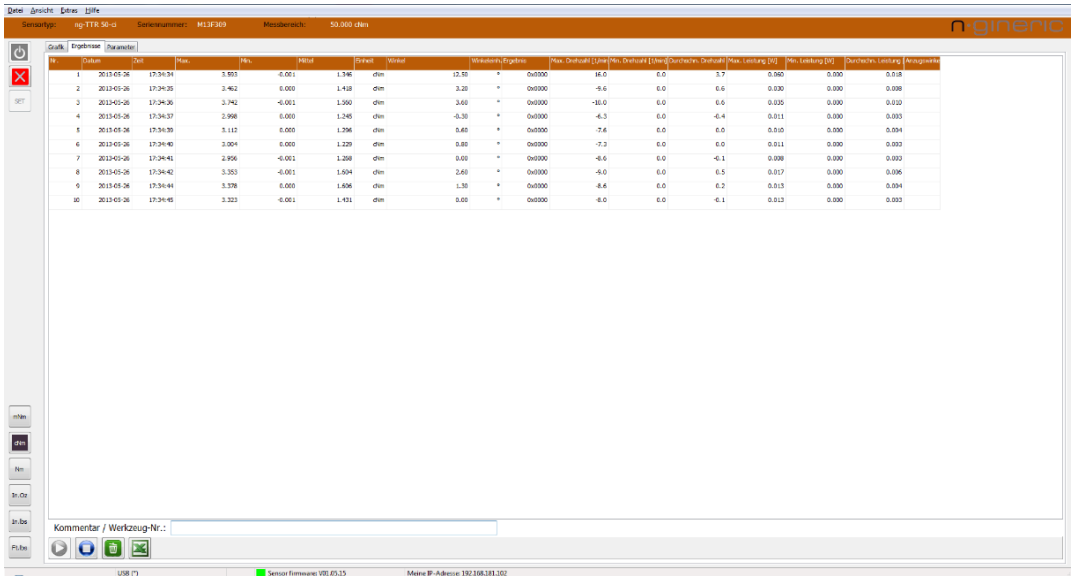

n-quirer TT V3 advanced measurement results

n-gineric Statistical Report

Date/Time:	28.08.12 18:01:49	Tool Serial Number:		M13F4E0
Target Value [Nm]:	0,5000	Tolerance (+/-) [%]:		12,00%

Count	Date	Time	Max.	Unit	Dev (Target) [%]	Dev. (Mean) [Nm]	Sqr. Deviation
1	2012-08-28	18:00:47	0,4925	Nm	-1,50	-0,0016	0,0000
2	2012-08-28	18:00:52	0,4899	Nm	-2,02	-0,0042	0,0000
3	2012-08-28	18:00:55	0,5012	Nm	0,24	0,0071	0,0001
4	2012-08-28	18:00:58	0,4895	Nm	-2,10	-0,0046	0,0000
5	2012-08-28	18:01:00	0,503	Nm	0,60	0,0089	0,0001
6	2012-08-28	18:01:03	0,4966	Nm	-0,68	0,0025	0,0000
7	2012-08-28	18:01:06	0,48	Nm	-4,00	-0,0141	0,0002
8	2012-08-28	18:01:11	0,4996	Nm	-0,08	0,0055	0,0000
9	2012-08-28	18:01:22	0,5033	Nm	0,66	0,0092	0,0001
10	2012-08-28	18:01:25	0,485	Nm	-3,00	-0,0091	0,0001

Lower Limit:	0,4400
Upper Limit:	0,5600
Process Mean:	0,4941
Standard Deviation:	0,0080
Cm	2,50
Cml	2,26
Cmu	2,75
Cmk	2,26

n-quirer TT V3 advanced SPC calculation in Excel

n-gineric Statistical Report

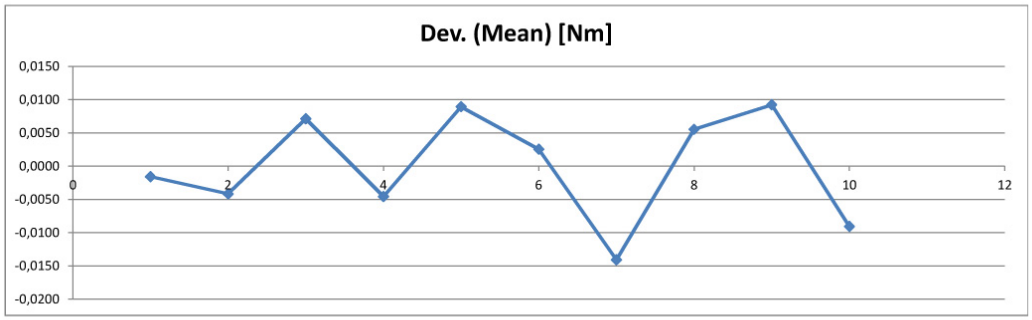

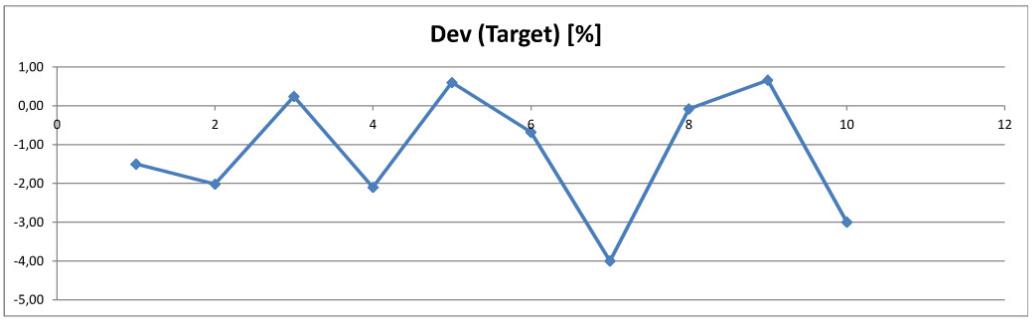

n-quirer TT V3 advanced Example of an Excel report with SPC functionality. Modifications of the template are possible according to your demands.

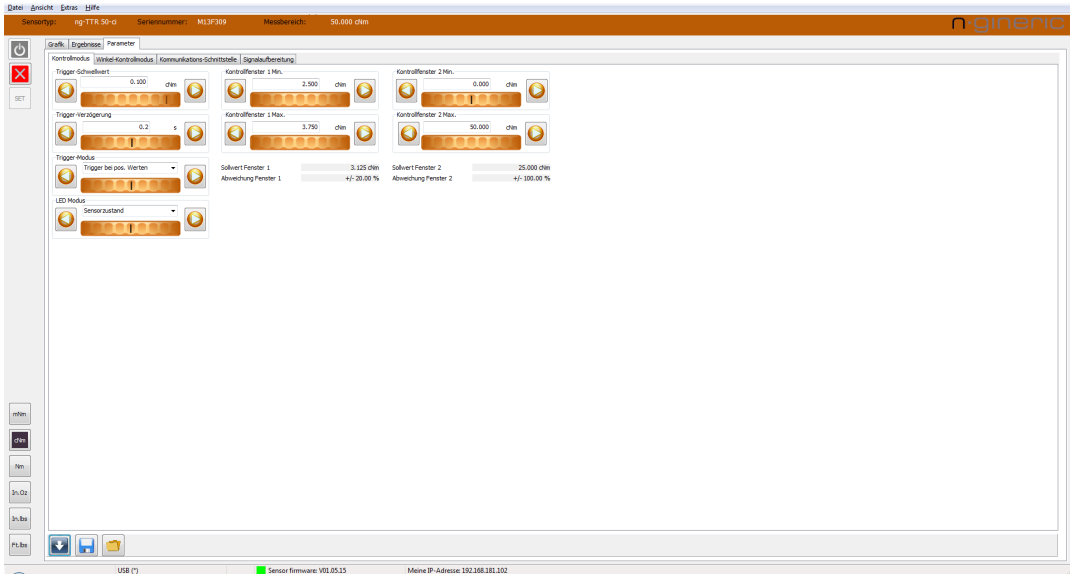

n-quirer TT V3 advanced control mode tab sheet

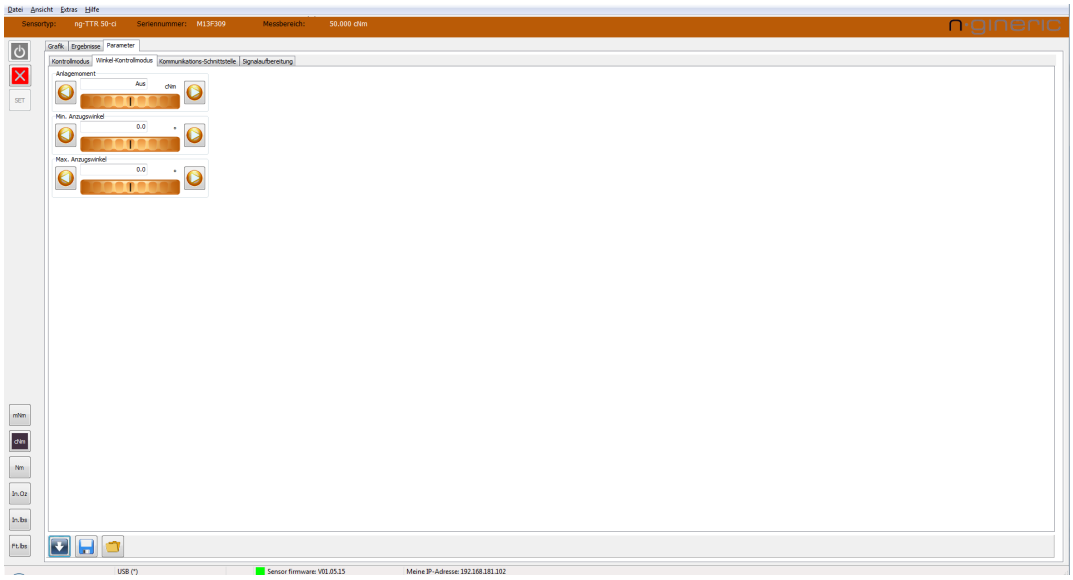

n-quirer TT V3 advanced angle control mode tab sheet

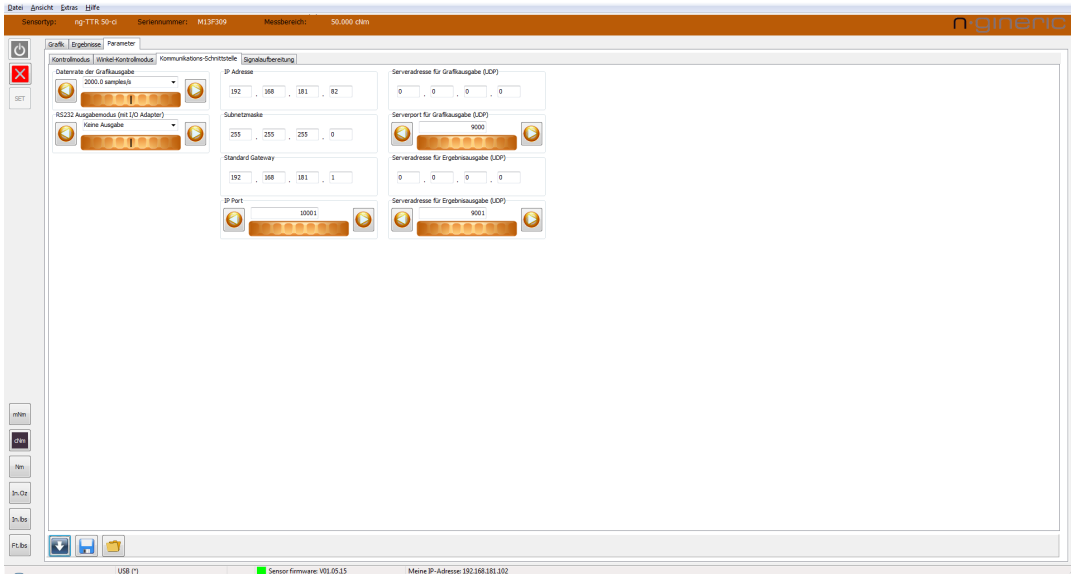

n-quirer TT V3 communication interface tab sheet

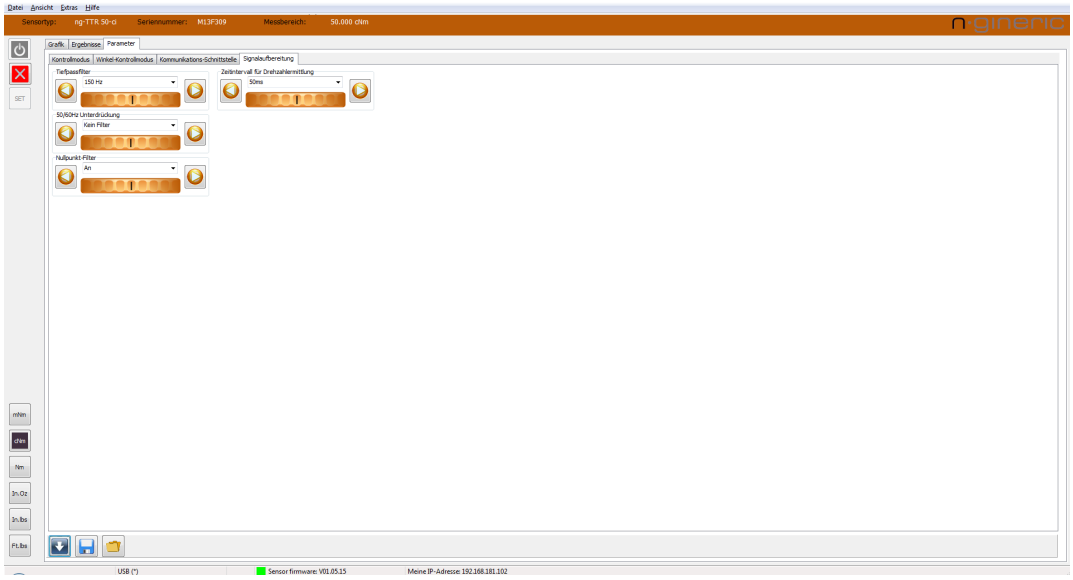

n-quirer TT V3 signal conditioning tab sheet

Article Number	01-01-00143-01

1.3 Torque Driver System Software n-quirer TD

n-quirer TD V2 is a software designed for **ng-TDH** and **ng-TDS** Torque Drivers. It provides parameter and program management, graphical visualization, and screw driving process data logging.

After connecting the Torque Driver, the system is being identified by showing the type, serial number, and torque range in the header line. The Torque Driver firmware version is shown at the bottom line.

Requirements to the PC system:

- Operating system Windows 11
- Screen resolution at least 1366 x 768 pixels
- Microsoft Excel 2007 or later or compatible Office package

Article Number	01-01-00215-01

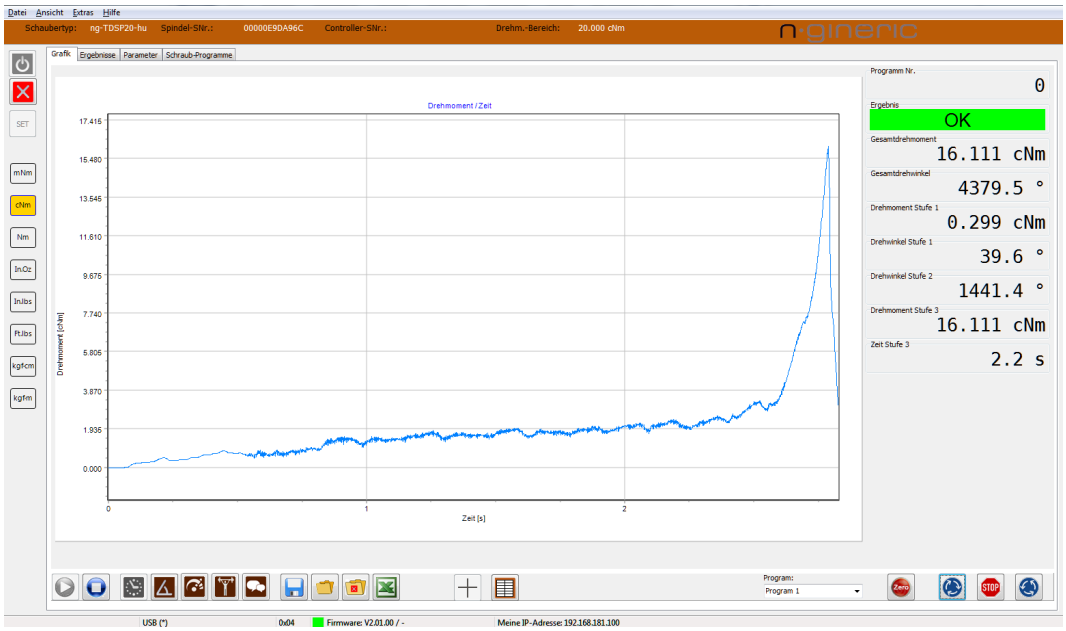

n-quirer TD V2 Graph

The graph reading of the screw tightening process is shown here. The display for numerical results of each screw tightening step can be configured in the setup.

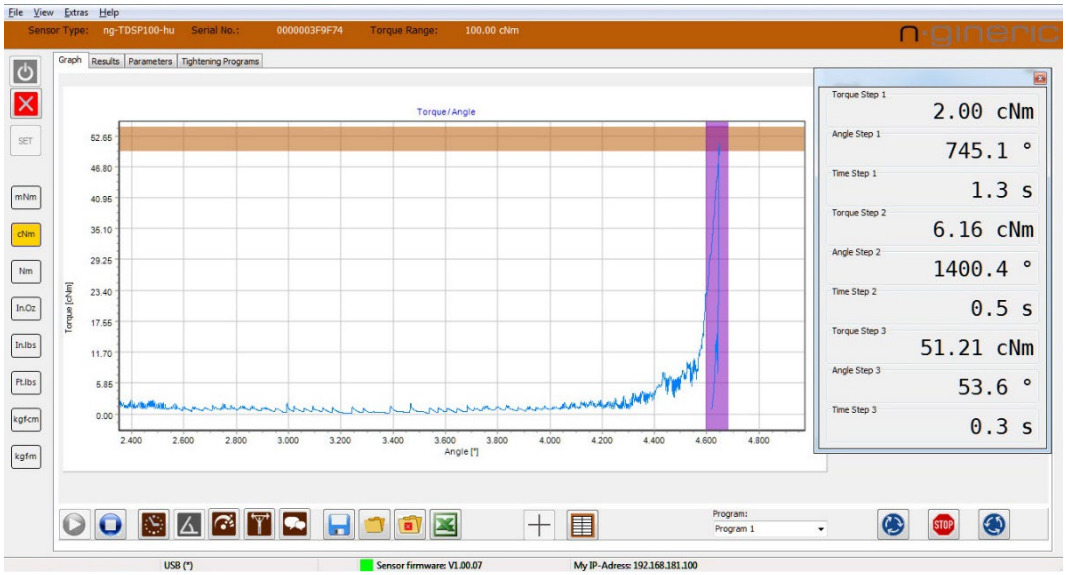

n-quirer TD V2 Torque/Angle Graph

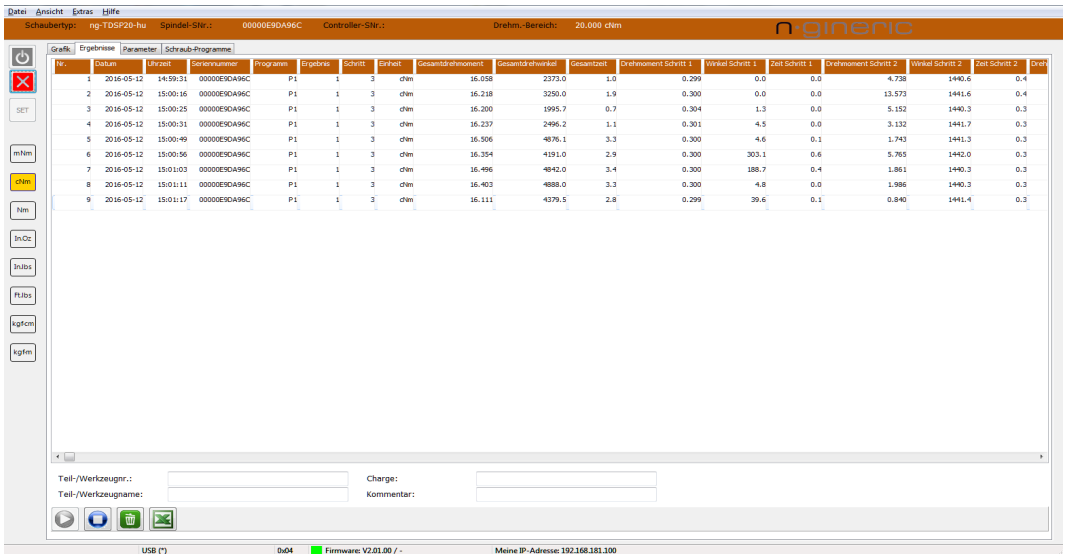

n-quirer TD V2 Screw Tightening Results

After each screw tightening the result will be appended to the listing.
The listing of results can be exported into Excel.

A1 n-gineric Screw Fastening Results

n-gineric Screw Fastening Results

Date/Time:	2015-07-27 18:00:05	Tool Ser. No:	0000003F9F74	Tool Type:	ng-TDSP100-hu
Comment:	Test 1001				
Part No:		Part Name:		Batch:	

Measurement								Total Result			Step 1			Step 2			Step 3		
No.	Date	Time	Serial No.	Program No.	Result	Step	Unit	Torque	Angle	Time	Torque	Angle	Time	Torque	Angle	Time	Torque	Angle	Time
1	2015-07-27	17:57:31	0000003F9F74	P1	1	3	cNm	50,940	3456,9	3,2	2,010	809,3	1,5	10,970	1401,2	0,5	50,940	19,8	1,1
2	2015-07-27	17:57:37	0000003F9F74	P1	1	3	cNm	51,940	3267,9	2,8	2,010	594,2	1,1	7,680	1400,0	0,5	51,940	20,5	1,1
3	2015-07-27	17:57:42	0000003F9F74	P1	1	3	cNm	52,180	3559,7	3,0	2,000	592,2	1,0	6,180	1400,1	0,5	52,180	31,2	1,4
4	2015-07-27	17:57:46	0000003F9F74	P1	1	3	cNm	52,540	3695,6	3,2	2,000	626,0	1,1	8,590	1400,5	0,5	52,540	25,4	1,5
5	2015-07-27	17:57:51	0000003F9F74	P1	1	3	cNm	50,510	3621,6	3,1	2,010	593,5	1,1	6,850	1400,9	0,5	50,510	72,9	1,5
6	2015-07-27	17:58:01	0000003F9F74	P1	1	3	cNm	51,360	3225,4	2,7	2,010	540,9	1,0	6,530	1400,3	0,5	51,360	81,6	1,1
7	2015-07-27	17:58:05	0000003F9F74	P1	1	3	cNm	50,700	2726,9	2,3	2,010	621,1	1,1	5,910	1400,9	0,5	50,700	43,8	0,6
8	2015-07-27	17:58:09	0000003F9F74	P1	1	3	cNm	51,270	2768,2	2,3	2,000	558,0	1,0	6,710	1401,1	0,5	51,270	87,9	0,7
9	2015-07-27	17:58:16	0000003F9F74	P1	1	3	cNm	50,810	2712,6	2,2	2,000	497,4	0,9	11,730	1400,3	0,5	50,810	32,3	0,7
10	2015-07-27	17:58:20	0000003F9F74	P1	1	3	cNm	53,030	2321,4	1,8	2,000	457,2	0,8	9,450	1400,1	0,5	53,030	45,3	0,4
11	2015-07-27	17:58:36	0000003F9F74	P1	1	3	cNm	50,800	2376,0	1,9	2,000	484,8	0,9	13,000	1401,3	0,5	50,800	72,8	0,4
12	2015-07-27	17:58:40	0000003F9F74	P1	1	3	cNm	51,580	2435,6	1,8	2,050	395,3	0,7	6,260	1400,8	0,5	51,580	36,8	0,6

The listing of the screw tightening results can be exported into Excel, e. g. for Statistical Process Control.

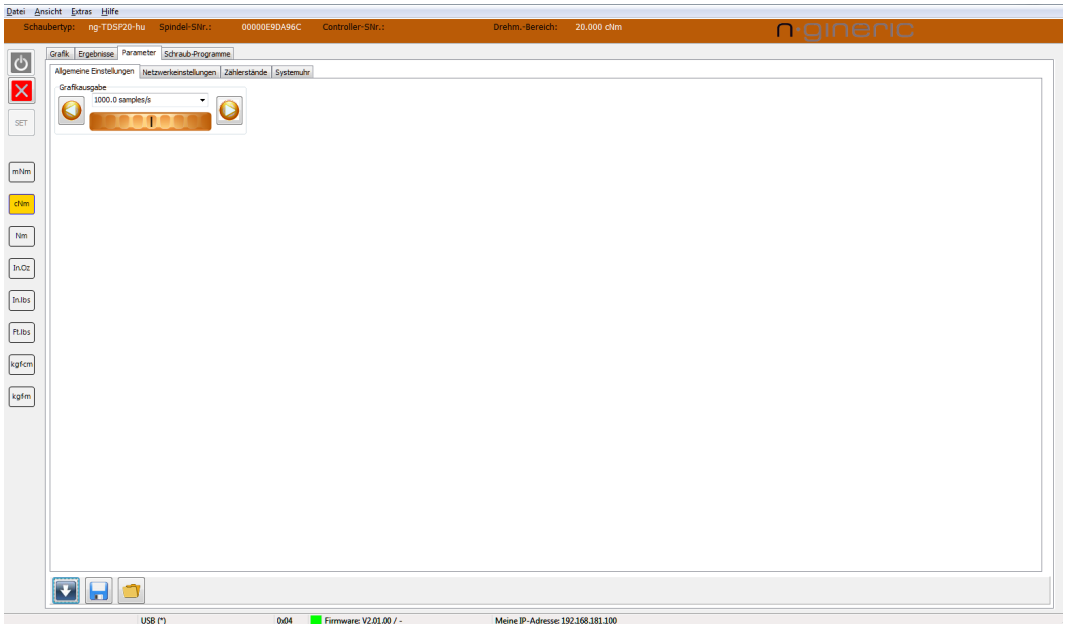

n-quirer TD V2 Parameters

Here parameters such as the number of measured values per second for the graphic display and network settings can be configured and the meter readings can be read out.

Parameter settings

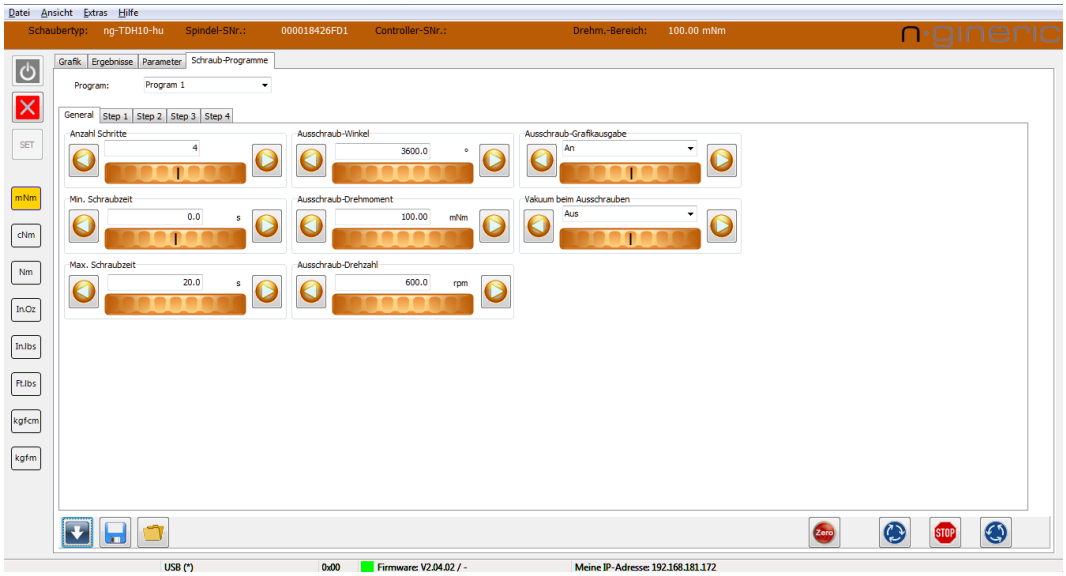

n-quirer TD V2 Tightening Programs

General Parameters

General parameters like the number of steps of the tightening process, the unscrew parameters, the vacuum function and the tightening cycle time window can be configured here.

Screw Tightening Step Types

The screw tightening process can be defined by a sequence of 1 to 8 different steps.

There are 7 step types:

- Simple Torque Step
- Angle Step
- Average Angle Step
- Torque Step
- Time Step
- Snug Torque Step
- Delta Torque Step

Simple Torque Step

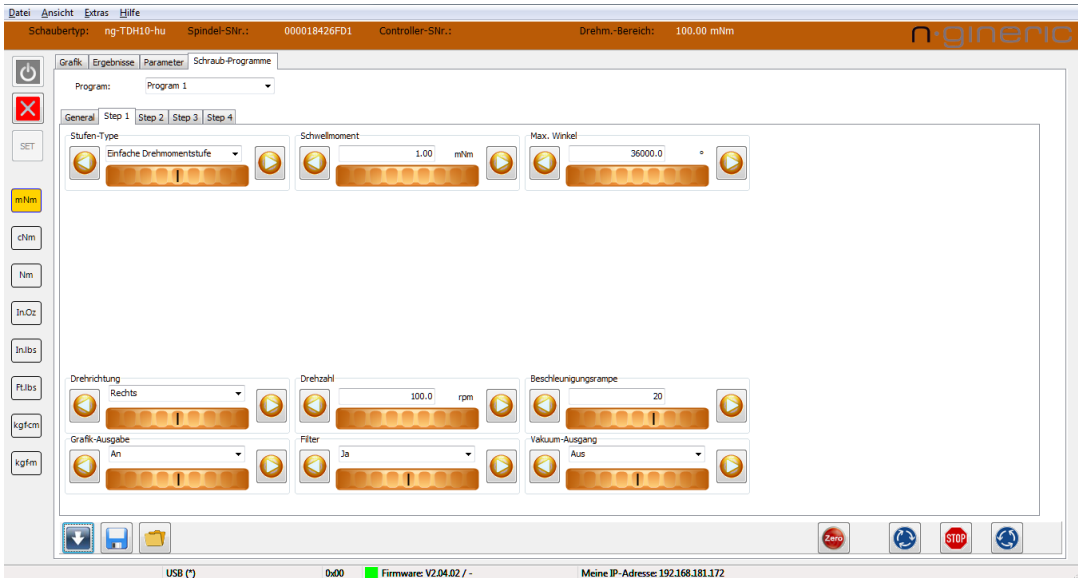

The Simple Torque Step facilitates the screw engagement and avoids cross threading.

If either the set threshold torque or the maximum angle of rotation is reached within the set screwdriving time, the screwdriving system proceeds to the next step, otherwise an error message is issued.
The acceleration ramp concerns the acceleration at the beginning of this screwdriving step, the angle of rotation limitation applies from the time the threshold torque is reached.

Angle Step

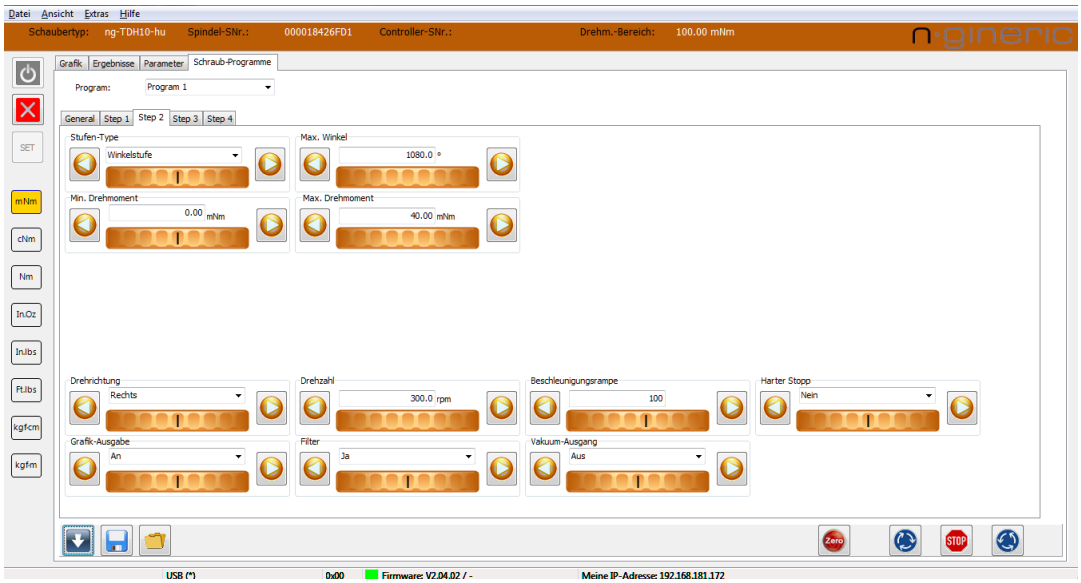

The angle step is used for fast, angle-controlled screwing in of the screw for process time optimization. The parameter angle of rotation must be set so that the head rest of the screw is not yet reached.
The acceleration ramp concerns the acceleration at the beginning of this screwdriving stage; in addition to the angle of rotation limitation, a torque window can also be specified.

Average Angle Step

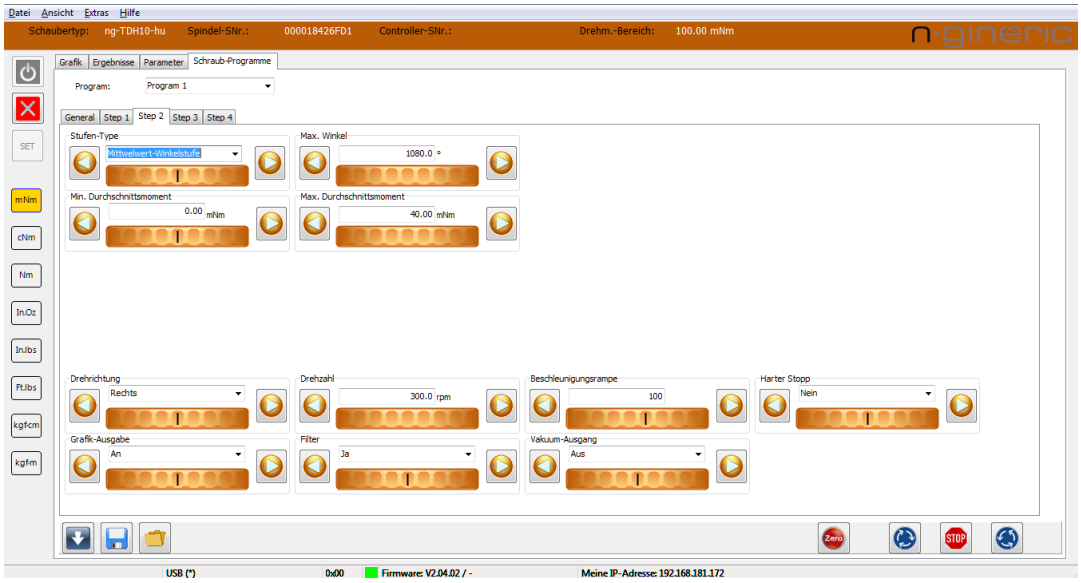

The Average Angle Step is mainly used for measurement applications. Here the arithmetic mean of the torque is being calculated while the angle step is running. The mean value has to reach the minimum torque, but must not exceed the maximum torque.

Torque Step

The Torque Step provides a high level of process security by monitoring the torque window, the time window, the angle torque/angle gradient, and, as an option, the screw insertion depth.

Time Step

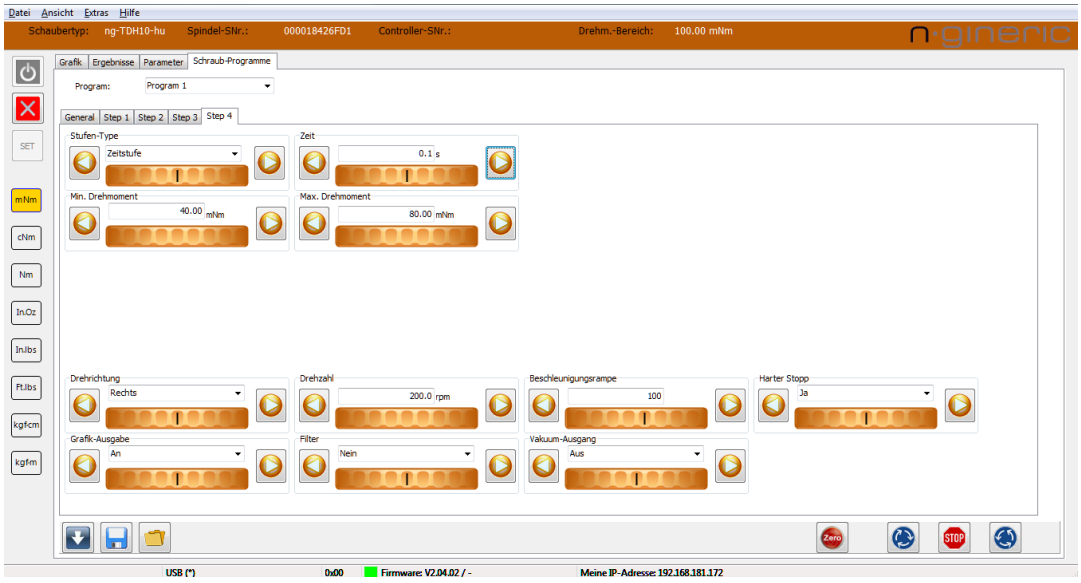

The Time Step provides a programmable residence time, with optional rotary motion in both directions under certain conditions, such as the specification of a torque window for testing purposes.

Snug Torque Step

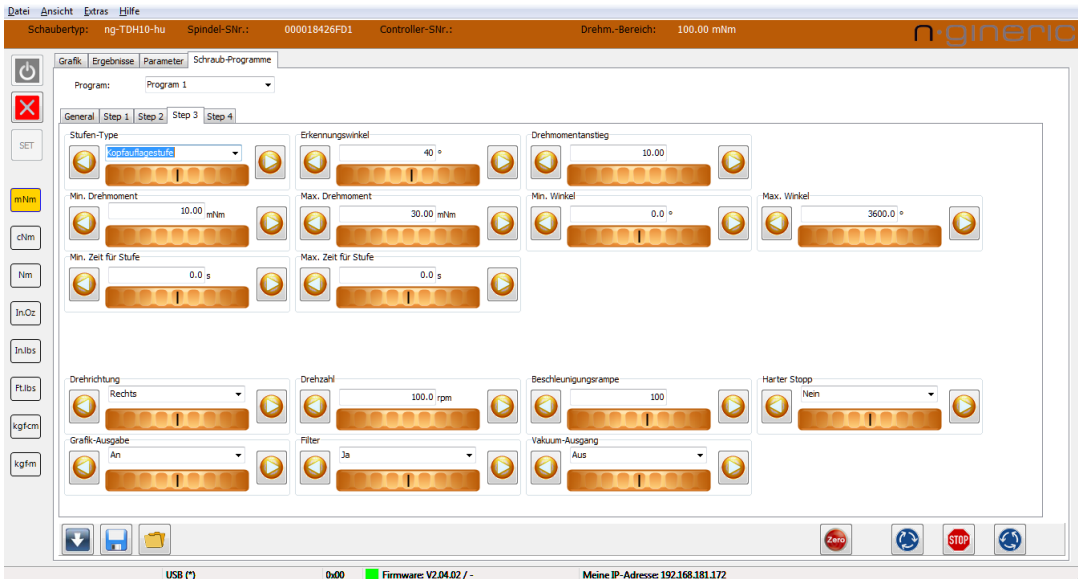

The Snug Torque Step was designed to detect the torque just at the point when the screw is seated, that means when the screw head touches the surface of the part, just before additional torque will generate clamping force inside the screw joint. As soon as the screw is seated, the torque raises quickly, the torque vs. angle gradient changes, so it can be detected by appropriate parameter settings.

Delta Torque Step

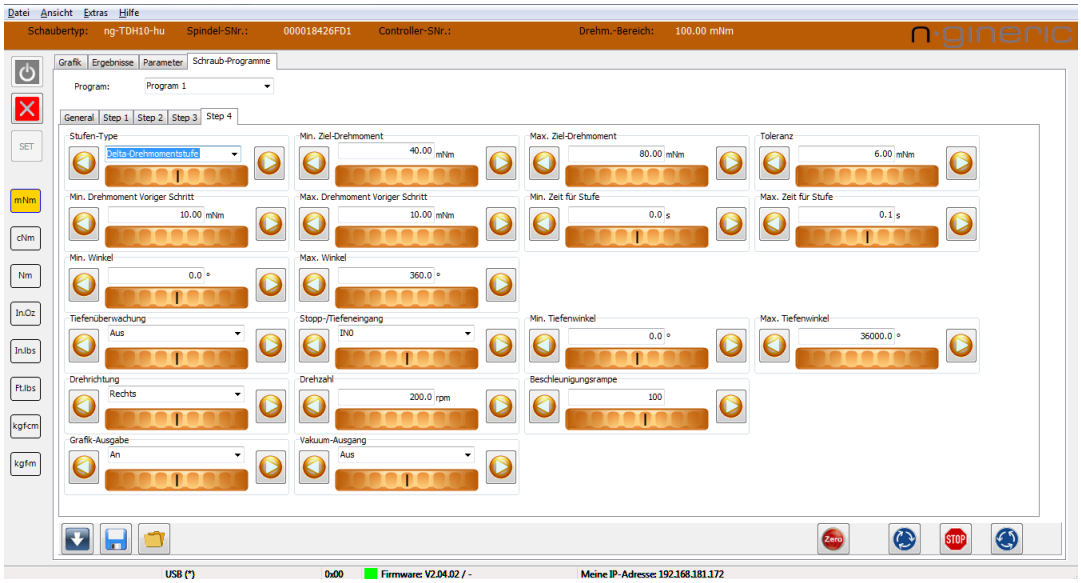

The Delta Torque Step allows to apply an amount of torque providing proportionate clamping force to the screw joint, with monitoring of the programmed windows. It is especially used after the Snug Point detection. The target torque is variably calculated, depending on the Snug Torque (if the previous step was a Snug Step), and the programmed limits. The torque delta can be varied by setting the target limits, because if the snug torque is high, it allows a higher amount of added torque, compared to a low snug torque.

The option of automatically calculating additional torque reduction, proportional to the snug torque, is useful in many cases where the load bearing capacity of the thread is heavily dependent on the snug torque. The calculation is made according to the two selected torque limits of the previous step and the target torque limits.

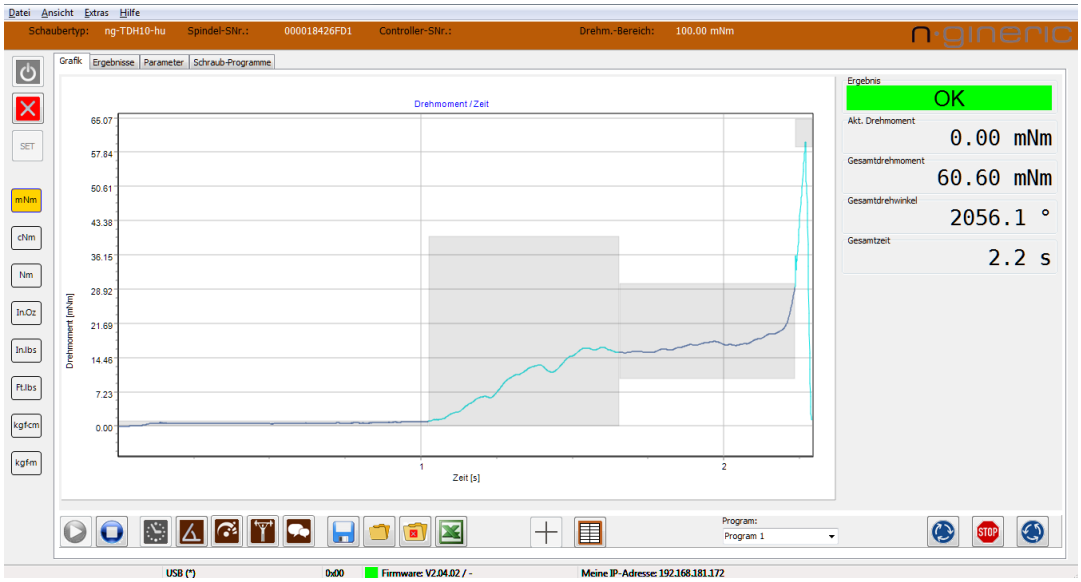

Screwdriving curve with single torque stage, followed by angle stage, head support stage and delta torque stage

1.4 Torque Driver System Software n-quirer TD advanced

n-quirer TD V2 advanced is software for programming the tightening parameters, for the graphical display of progress curves and for documenting the tightening process data, with an additional sequencer module with user guidance.

The sequencer editor module enables the definition of an assembly step-by-step sequence. Each step can be a screw driving step or any other assembly operation, with instructions precisely described by text and images. The operator is guided through that process according to the programmed sequence. The sequence can be started by scanning a product code via barcode reader, optionally followed by scanning up to 10 parts of a workpiece assembly.
After the assembly sequence has been finished (or canceled), the overall result is documented in a log file with details and the evaluation (G/NG) of each process step, including the scanned workpiece identity information.

The screw bits used are monitored in conjunction with the **ng-BPC** bit selector and screw position controller. The user is prompted to change bits by pick-by-light signals.
When the **ng-LAP400** device holder with position sensors is connected, the sequence of the tightening sequence can also be checked according to the programmed tightening coordinates. The screw coordinates are taught with a simple click of the mouse in the sequencer editor. The screw driving process is then only enabled in the allowed tightening position.

PC system requirements:

- Operating system Windows 11
- Screen resolution at least 1366 x 768 pixels
- Microsoft Excel 2007 or later or compatible Office package

Article Number	01-01-00319-01

Since it is a modular system, the following combinations are possible:

1. **ng-TDH** Sensor Torque Driver and **n-quirer TD advanced** in the sequencer mode

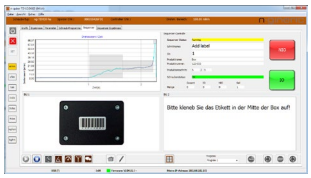

2. **ng-TDH** Sensor Torque Driver and **n-quirer TD advanced** in the sequencer mode, with a barcode reader for the sequence start and for the assignment of the workpiece identities (up to 10 parts of an assembly can be scanned one after the other)

3. **ng-TDH** Sensor Torque Driver and **n-quirer TD advanced** in the sequencer mode, with a barcode reader for the sequence start and for the assignment of the workpiece identities, additionally with the **ng-BPC** for the assignment of screw bits according to the respective screw position (removal via Pick-by-Light signaling)

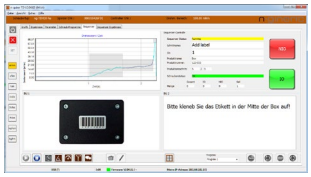

4. **ng-TDH** Sensor Torque Driver and **n-quirer TD advanced** in the sequencer mode, with a barcode reader for the sequence start and for the assignment of the workpiece identities, aditionally with the **ng-BPC** for the assignment of screw bits according to the respective screwing position, and **ng-LAP400** device holder for the tightening position control (connected to the **ng-BPC**).

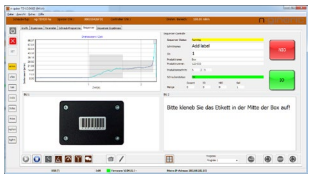

The combination of **ng-TDH** Sensor Torque Driver and **n-quirer TD advanced** in the sequencer mode with a barcode reader, with the **ng-BPC** bit selector and the **ng-LAP400** position control enables zero-error production with seamless process data documentation.

All functions are monitored, visualized and edited within the **n-quirer TD advanced** software. The system is characterized by its intuitive usability and minimal setup-time, typically 30 minutes, for programming and teaching a complete new assembly sequence.

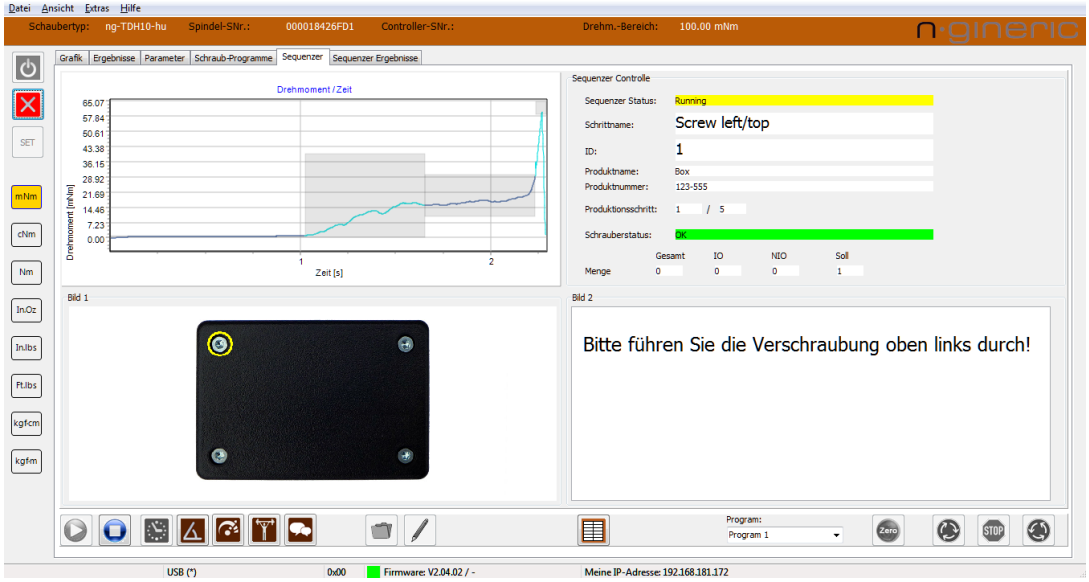

Example of instructions for a screw tightening step

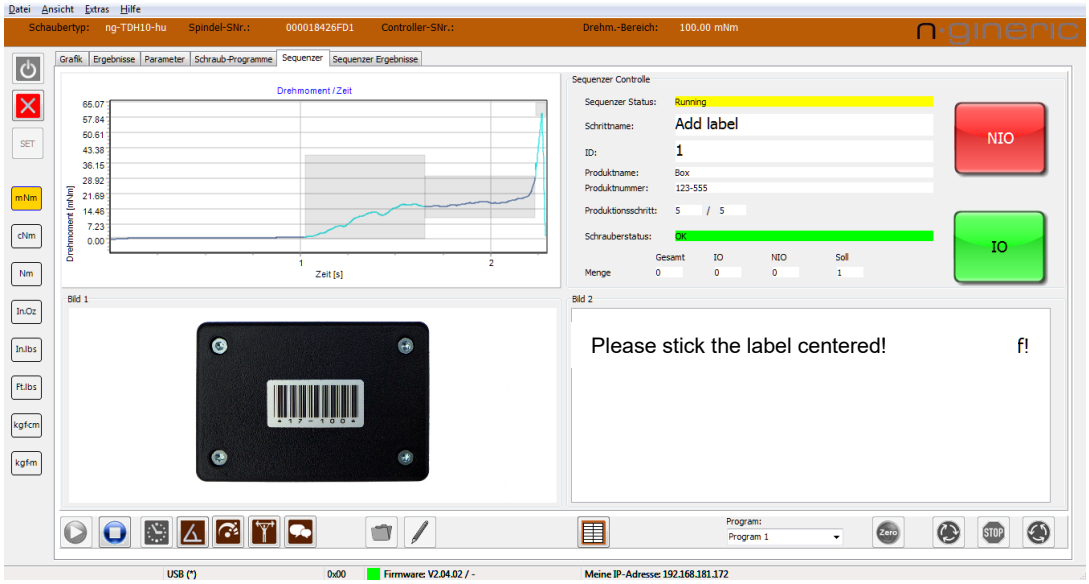

Example of instructions for a general step

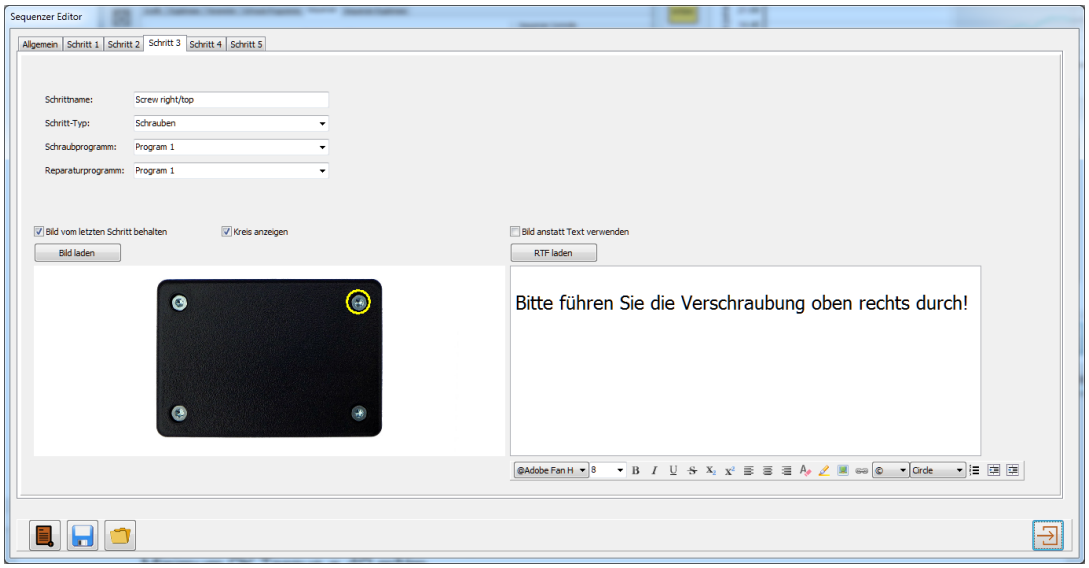

Sequencer-Editor

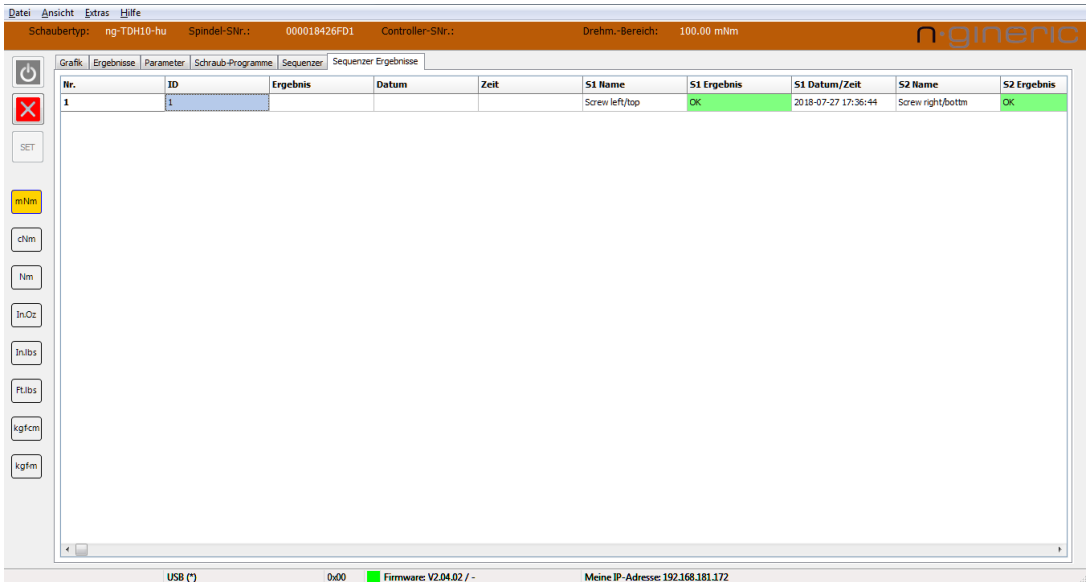

Sequencer-Results Listing

2 Intelligent Torque Sensors

- Based on Strain Gauge Technology
- Digital and Anlog Interfaces

- Rotary Torque/Angle Sensors
- Stationary Torque Sensors

Nominal Measurement Ranges:

+/- 0.01 Nm
...
+/- 1,000 Nm

- Handheld Torque Sensors

+/- 0.01 Nm
...
+/- 2 Nm

Torque Sensor Type Nomenclature:

```
ng-TT□-□□□-□□
|     | | |  |        | └ i  = intelligent (USB + Ethernet + ng-Link)
|     | | |  |        | └ u  = intelligent (USB)
|     | | |  |        | └ a  = analog
|     | | |  |        └ x  = hexagon drive
|     | | |  |        └ c  = cylindric shafts
|     | | |  |        └ q  = square drive
|     | | |  └ Torque measurement range (cNm)
|     | | └ R = Rotary
|     | | └ S = Stationary
|     | | └ H = Handheld
|     └ TT = Torque Transducer
└ ng = n-gineric Product
```

2.1 Rotary Torque/Angle Sensors ng-TTR-i

- High precision torque sensors based on strain gauges
- Brushless energy and signal transmission
- High resolution incremental encoder
- Ultra compact size
- USB Interface
- Ethernet Interface
- *ng-Link* Interface
- Torque window control with LED
- Optional mechanical overload protection clutch MOPC (sensors up to 200 cNm range)
- Standard USB and Ethernet connectors
- Maintenance free

Article Number	Type	Torque Range cNm	Interface	MOPC	Drive
01-01-00036-01	ng-TTR01-ci	+/- 1	intelligent	✓	3 mm Shaft
01-01-00004-01	ng-TTR02-ci	+/- 2	intelligent	✓	3 mm Shaft
01-01-00005-01	ng-TTR05-ci	+/- 5	intelligent	✓	3 mm Shaft

Article Number	Type	Torque Range cNm	Interface	MOPC	Drive
01-01-00006-01	ng-TTR10-ci	+/- 10	intelligent	✓	5 mm Shaft
01-01-00003-01	ng-TTR20-ci	+/- 20	intelligent	✓	5 mm Shaft

Article Number	Type	Torque Range cNm	Interface	MOPC	Drive
01-01-00037-01	ng-TTR50-ci	+/- 50	intelligent	-	8 mm Shaft
01-01-00577-01	ng-TTR50-ci	+/- 50	intelligent	✓	8 mm Shaft
01-01-00038-01	ng-TTR100-ci	+/- 100	intelligent	-	8 mm Shaft
01-01-00578-01	ng-TTR100-ci	+/- 100	intelligent	✓	8 mm Shaft
01-01-00039-02	ng-TTR200-ci	+/- 200	intelligent	-	8 mm Shaft
01-01-00579-01	ng-TTR200-ci	+/- 200	intelligent	✓	8 mm Shaft
01-01-00040-01	ng-TTR500-ci	+/- 500	intelligent	-	8 mm Shaft
01-01-00041-01	ng-TTR1000-ci	+/- 1000	intelligent	-	8 mm Shaft
01-01-00140-02	ng-TTR2000-ci	+/- 2000	intelligent	-	12 mm Shaft

Article Number	Type	Torque Range cNm	Interface	MOPC	Drive
01-01-00007-01	ng-TTR50-xi	+/- 50	intelligent	✓	¼“ Hexagon
01-01-00008-01	ng-TTR100-xi	+/- 100	intelligent	✓	¼“ Hexagon
01-01-00009-01	ng-TTR200-xi	+/- 200	intelligent	✓	¼“ Hexagon
01-01-00010-01	ng-TTR500-xi	+/- 500	intelligent	-	¼“ Hexagon
01-01-00011-01	ng-TTR1000-xi	+/- 1000	Intelligent	-	¼“ Hexagon
01-01-00074-02	ng-TTR2000-xi	+/- 2000	Intelligent	-	¼“ Hexagon

Article Number	Type	Torque Range Nm	Interface	MOPC	Drive
01-01-00407-01	ng-TTR500-qi	+/- 5	Intelligent	-	¼“ Square
01-01-00249-01	ng-TTR2000-qi	+/- 20	Intelligent	-	¼“ Square
01-01-00073-01	ng-TTR5000-qi	+/- 50	Intelligent	-	⅜“ Square

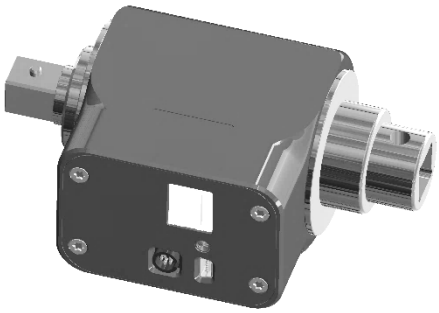

Article Number	Type	Torque Range Nm	Interface	MOPC	Drive
01-01-00149-02	ng-TTR10000-qi	+/- 100	Intelligent	-	½“ Square
01-01-00189-02	ng-TTR20000-qi	+/- 200	Intelligent	-	½“ Square
01-01-00151-02	ng-TTR50000-qi	+/- 500	Intelligent	-	¾“ Square

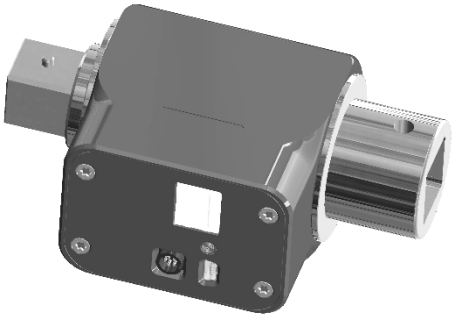

Article Number	Type	Torque Range Nm	Interface	MOPC	Drive
01-01-00200-01	ng-TTR100000-qi	+/- 1000	Intelligent	-	1“ Square

2.2 Rotary Torque/Angle Sensors ng-TTR-u

- High precision torque sensors based on strain gauges
- Brushless energy and signal transmission
- High resolution incremental encoder
- Ultra compact size
- USB Interface
- Torque window control with LED
- Optional mechanical overload protection clutch MOPC (sensors up to 200 cNm range)
- Standard USB connector
- Maintenance free

Article Number	Type	Torque Range cNm	Interface	MOPC	Drive
01-01-00088-01	ng-TTR01-cu	+/- 1	USB	✓	3 mm Shaft
01-01-00089-01	ng-TTR02-cu	+/- 2	USB	✓	3 mm Shaft
01-01-00090-01	ng-TTR05-cu	+/- 5	USB	✓	3 mm Shaft

Article Number	Type	Torque Range cNm	Interface	MOPC	Drive
01-01-00091-01	ng-TTR10-cu	+/- 10	USB	✓	5 mm Shaft
01-01-00092-01	ng-TTR20-cu	+/- 20	USB	✓	5 mm Shaft

Article Number	Type	Torque Range cNm	Interface	MOPC	Drive
01-01-00580-01	ng-TTR50-cu	+/- 50	USB	-	8 mm Shaft
01-01-00093-01	ng-TTR50-cu	+/- 50	USB	✓	8 mm Shaft
01-01-00581-01	ng-TTR100-cu	+/- 100	USB	-	8 mm Shaft
01-01-00094-01	ng-TTR100-cu	+/- 100	USB	✓	8 mm Shaft
01-01-00582-01	ng-TTR200-cu	+/- 200	USB	-	8 mm Shaft
01-01-00095-01	ng-TTR200-cu	+/- 200	USB	✓	8 mm Shaft
01-01-00096-01	ng-TTR500-cu	+/- 500	USB	-	8 mm Shaft
01-01-00097-01	ng-TTR1000-cu	+/- 1000	USB	-	8 mm Shaft
01-01-00142-02	ng-TTR2000-cu	+/- 2000	USB	-	12 mm Shaft

Article Number	Type	Torque Range cNm	Interface	MOPC	Drive
01-01-00098-01	ng-TTR50-xu	+/- 50	USB	✓	¼“ Hexagon
01-01-00099-01	ng-TTR100-xu	+/- 100	USB	✓	¼“ Hexagon
01-01-00100-01	ng-TTR200-xu	+/- 200	USB	✓	¼“ Hexagon
01-01-00101-01	ng-TTR500-xu	+/- 500	USB	-	¼“ Hexagon
01-01-00102-01	ng-TTR1000-xu	+/- 1000	USB	-	¼“ Hexagon
01-01-00103-02	ng-TTR2000-xu	+/- 2000	USB	-	¼“ Hexagon

Article Number	Type	Torque Range Nm	Interface	MOPC	Drive
01-01-00408-01	ng-TTR500-qu	+/- 5	USB	-	¼“ Square
01-01-00191-01	ng-TTR2000-qu	+/- 20	USB	-	¼“ Square
01-01-00104-01	ng-TTR5000-qu	+/- 50	USB	-	⅜“ Square

Accessories

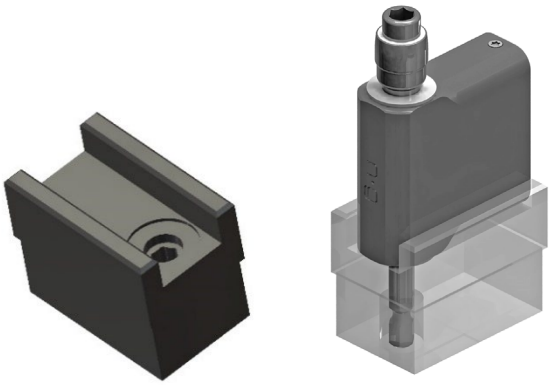

Sensor Shaft Detent ng-TTR ¼" Hexagon

Article Number	01-92-00016-01

Mounting bracket for the sensor type series **ng-TTR01-ci** to **ng-TTR5000-qi**

Article Number	Type
01-01-00163-01	Diameter 19 mm
01-01-00226-01	Diameter 20 mm

Sensor Shaft Detent ⅜" Square

Article Number	01-92-00037-01

Sensor Shaft Detent ½" Square

Article Number	01-92-00036-01

Torque Range	Torque Measurement Accuracy related to full scale value
+/- 1 cNm	1.0
+/- 2 cNm	0.5
+/- 5 cNm	0.2
+/- 10 cNm	0.2
+/- 20 cNm	0.2
+/- 50 cNm	0.2
+/- 1 Nm	0.2
+/- 2 Nm	0.1
+/- 5 Nm	0.1
+/- 10 Nm	0.1
+/- 20 Nm	0.1
+/- 50 Nm	0.1
+/- 100 Nm	0.1
+/- 200 Nm	0.1
+/- 500 Nm	0.1
+/- 1000 Nm	0.2

- Encoder Resolution: 0.1 Degrees
- Encoder Accuracy: 0.5 Degrees
- Max. Speed: 5,000 RPM
- Operating Temperature: 0 °C to +40 °C (+32 °F to 104 °F)

Dimensions and Weigth:

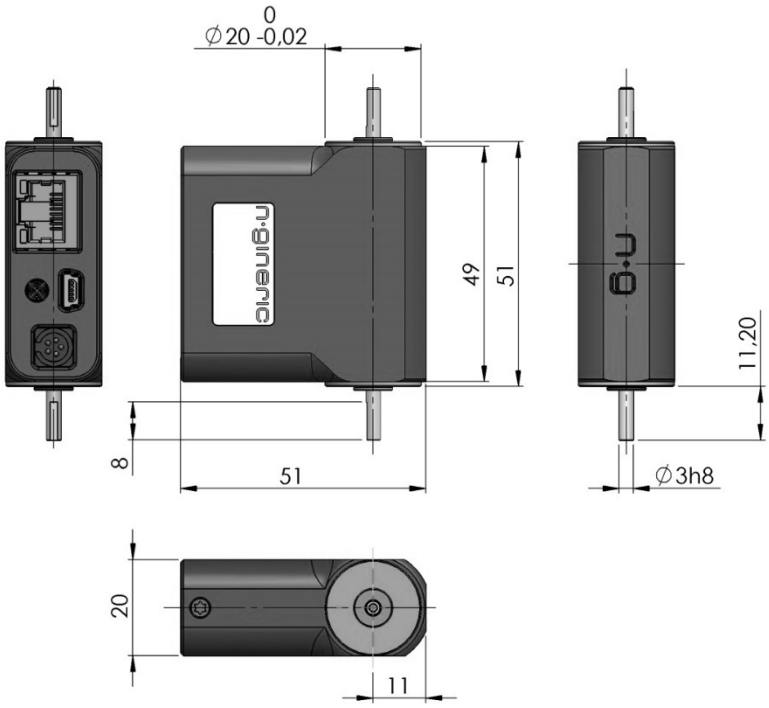

ng-TTR01-ci
ng-TTR02-ci
ng-TTR05-ci

ng-TTR01-cu
ng-TTR02-cu
ng-TTR05-cu

Weigth: 0,11 kg

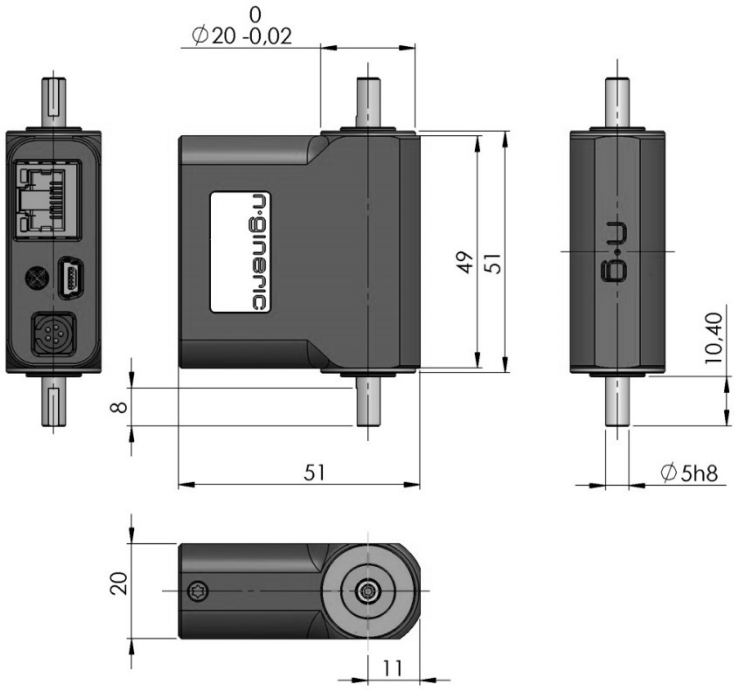

ng-TTR10-ci
ng-TTR20-ci

ng-TTR10-cu
ng-TTR20-cu

Weigth: 0,11 kg

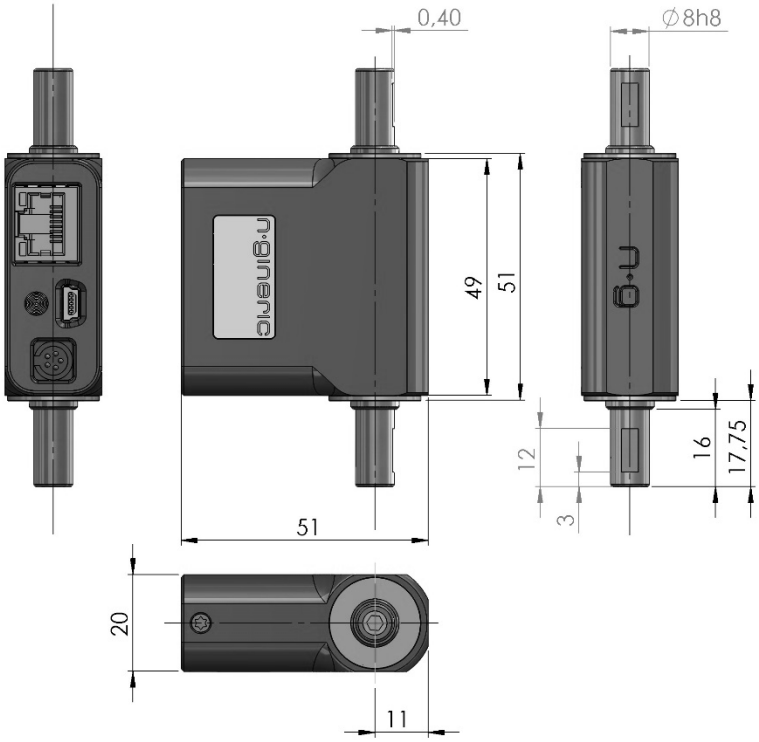

ng-TTR50-ci
ng-TTR100-ci
ng-TTR200-ci
ng-TTR500-ci
ng-TTR1000-ci

ng-TTR50-cu
ng-TTR100-cu
ng-TTR200-cu
ng-TTR500-cu
ng-TTR1000-cu

Weigth: 0,12 kg

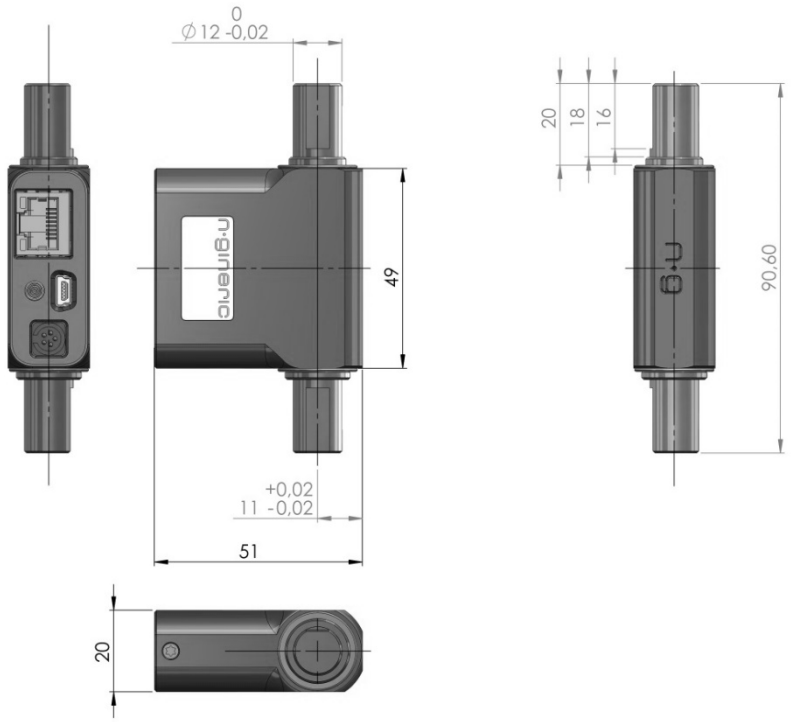

ng-TTR2000-ci

ng-TTR2000-cu

Weigth: 0,15 kg

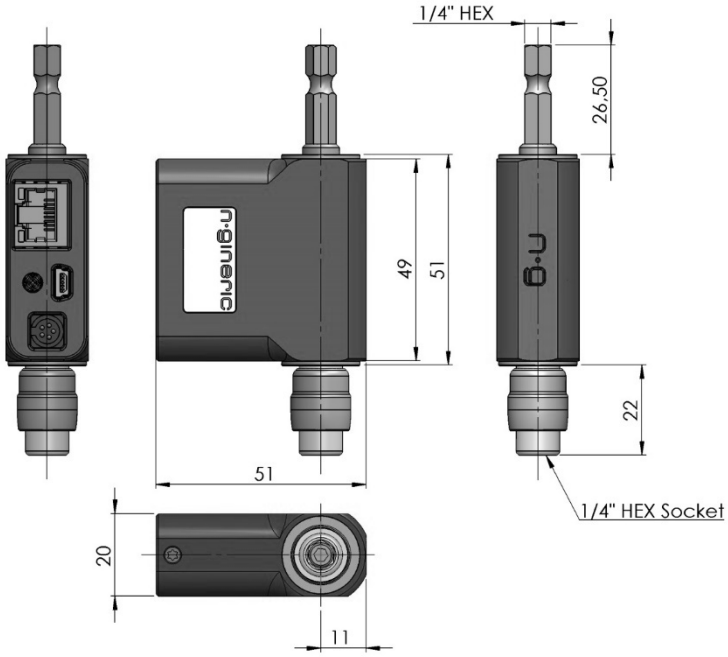

ng-TTR50-xi
ng-TTR100-xi
ng-TTR200-xi

ng-TTR50-xu
ng-TTR100-xu
ng-TTR200-xu

Weigth: 0,12 kg

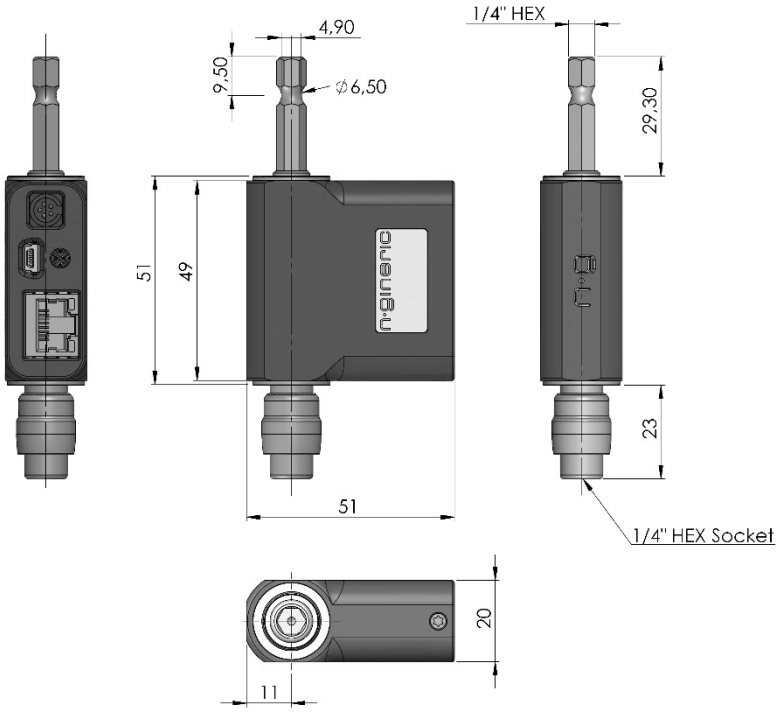

ng-TTR500-xi
ng-TTR1000-xi
ng-TTR2000-xi

ng-TTR500-xu
ng-TTR1000-xu
ng-TTR2000-xu

Weigth: 0,13 kg

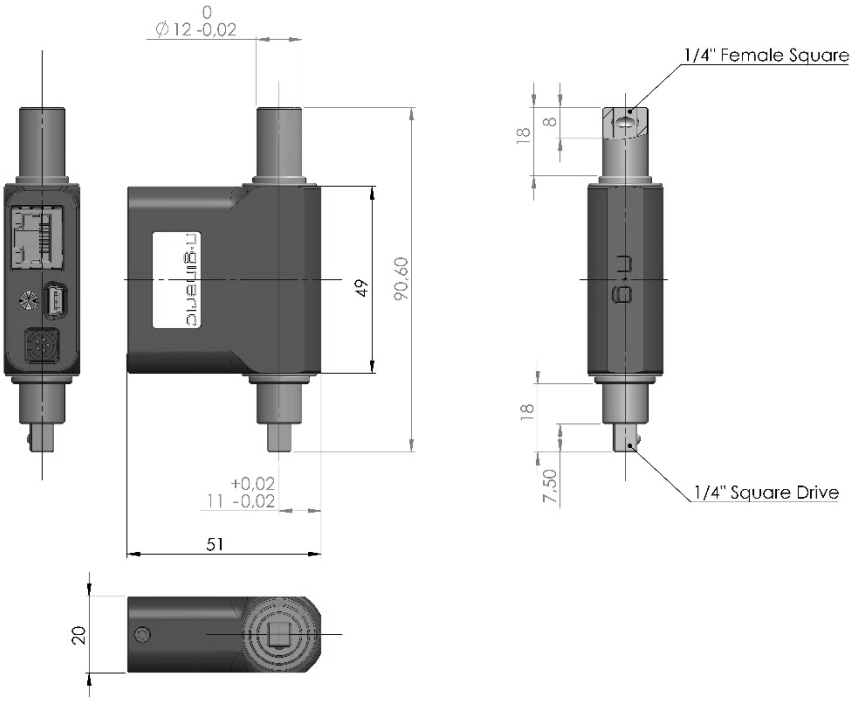

ng-TTR500-qi
ng-TTR2000-qi

ng-TTR500-qu
ng-TTR2000-qu

Weigth: 0,15 kg

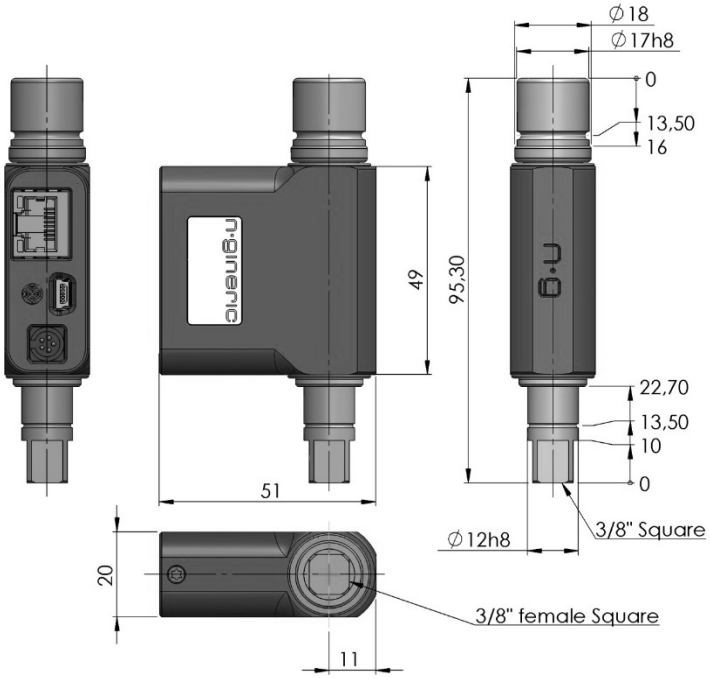

ng-TTR5000-qi

ng-TTR5000-qu

Weigth: 0,16 kg

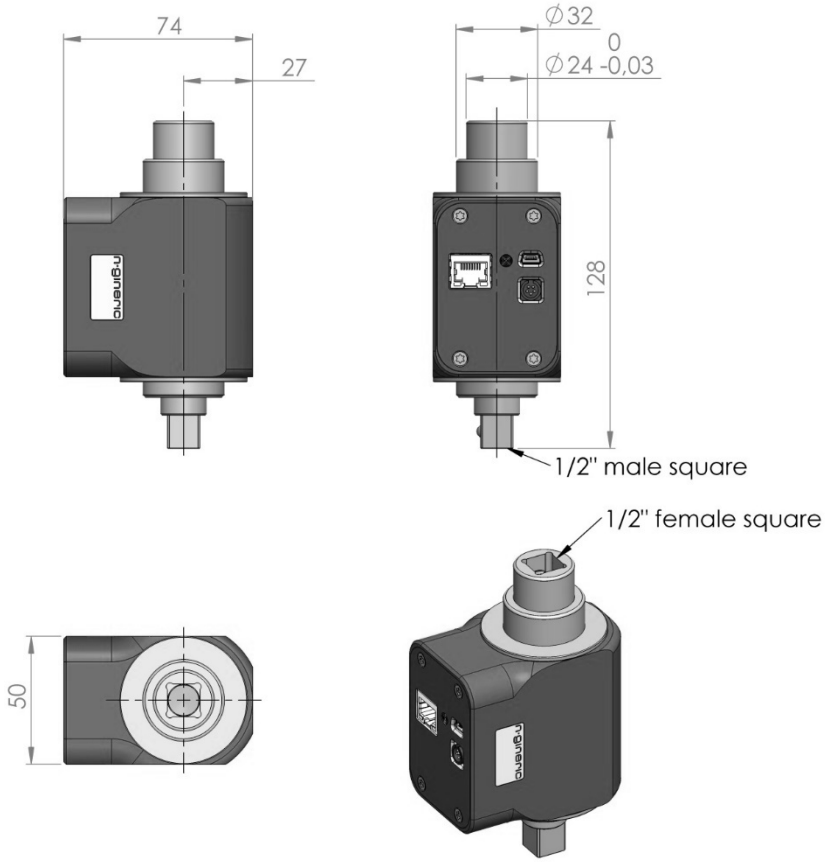

ng-TTR10000-qi

ng-TTR20000-qi

Weigth: 1,06 kg

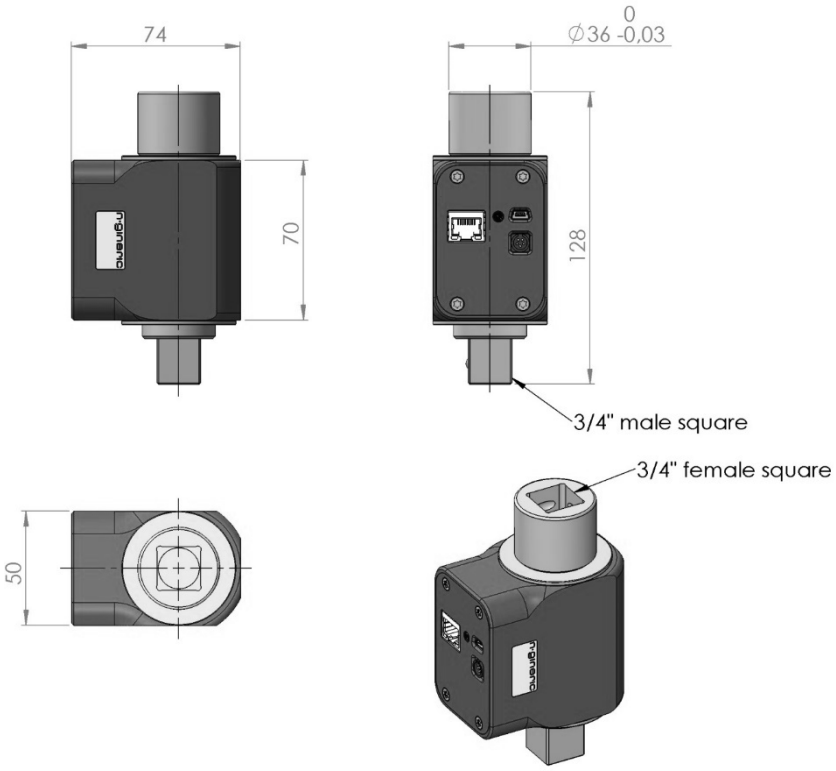

ng-TTR50000-qi

Weigth: 1,06 kg

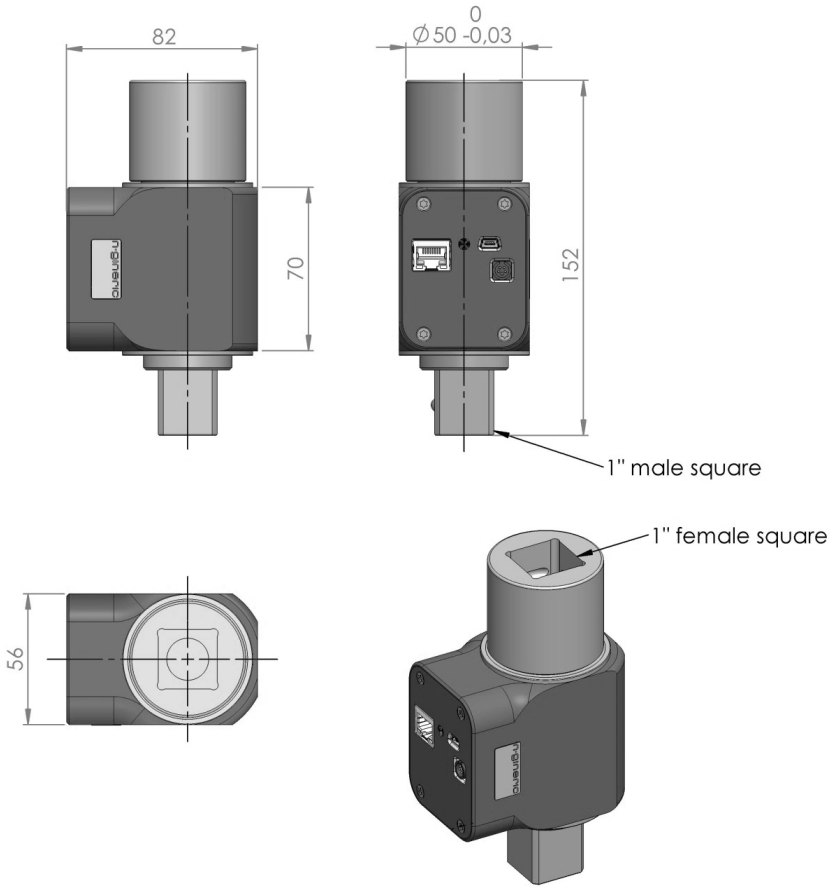

ng-TTR100000-qi

Weigth: 1,71 kg

2.3 Rotary Torque/Angle Sensors ng-vTTR

- High precision torque sensors based on strain gauges
- Brushless energy and signal transmission
- High resolution incremental encoder
- Ultra compact size
- Minimized weight and moment of inertia
- Extended RPM range (up to 10,000 min^{-1})
- USB Interface
- Ethernet Interface
- *ng-Link* Interface
- Torque window control with LED
- Robust threaded connector for USB
- Maintenance free

Torque Sensor Type Nomenclature:

ng- vTTR-□□□-□□

- **i** = intelligent
- **q** = square drive
- Torque Range in cNm
- **R** = **R**otatory
- **TT** = **T**orque **T**ransducer
- **v** = high **v**elocity
- **ng** = **n-g**ineric Product

Article Number	Type	Torque Range Nm	Interface	MOPC	Drive
01-01-00330-01	ng-vTTR8000-qi	+/- 80	intelligent	-	½" Square
01-01-00329-01	ng-vTTR10000-qi	+/- 100	intelligent	-	½" Square
01-01-00488-01	ng-vTTR12000-qi	+/- 120	intelligent	-	½" Square
01-01-00335-01	ng-vTTR16000-qi	+/- 160	intelligent	-	½" Square

Accessories

Cable ng-eTTR / USB-A 1.8 m

Article Number	01-90-00008-01

Torque Range	Torque Measurement Accuracy related to full scale value
+/- 80 Nm	0.1
+/- 100 Nm	0.1
+/-120 Nm	0.1
+/- 160 Nm	0.1

- Encoder Resolution: 0.1 Degrees
- Encoder Accuracy: 0.5 Degrees
- Max. Speed: 10.000 RPM
- Operating Temperature: 0 °C to +40 °C (+32 °F to 104 °F)

Dimensions and Weigth:

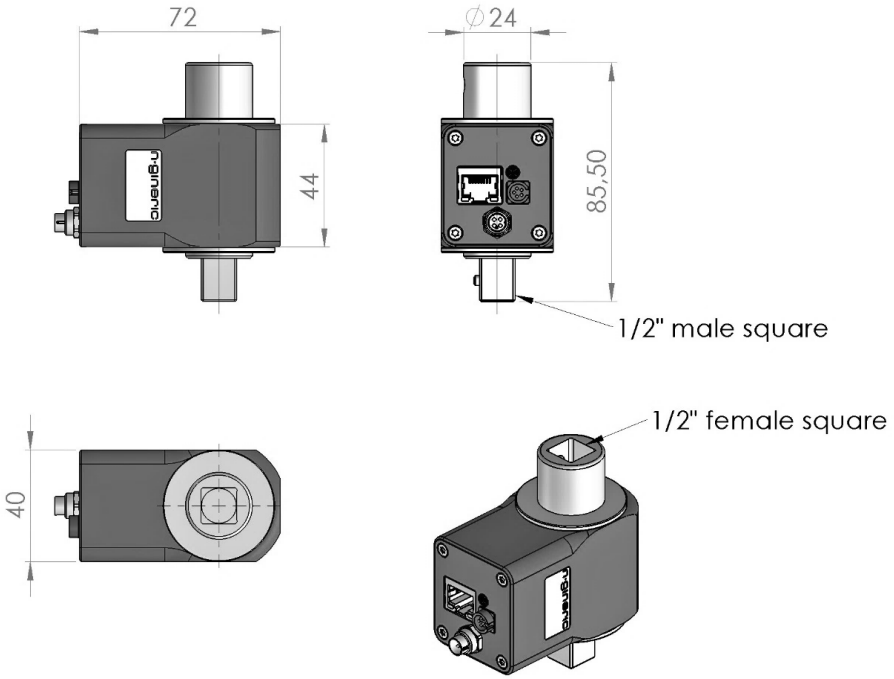

ng-vTTR8000-qi
ng-vTTR10000-qi
ng-vTTR12000-qi
ng-vTTR16000-qi

Weight: 0,36 kg

2.4 Rotary Torque/Angle Sensors ng-eTTR

Torque sensors with robust design for the production floor

- High precision torque sensors based on strain gauges
- Brushless energy and signal transmission
- Optional high resolution incremental encoder
- Compact size
- USB Interface
- Optional *ng-Link* Interface
- Torque window control with LED
- Robust threaded connector for USB
- Maintenance free
- Optional mounting flanges

Torque Sensor Type Nomenclature:

ng- eTTR-□□□-□□

- **f** = intelligent (USB + Encoder + *ng-Link* + mounting flanges)
- **r** = intelligent (USB + Encoder + *ng-Link*)
- **u** = intelligent (USB + Encoder)
- **x** = hexagon drive
- **q** = square drive
- Torque Range in cNm
- **R** = Rotary
- **TT** = Torque Transducer
- **e** = economy
- **ng** = n-gineric Product

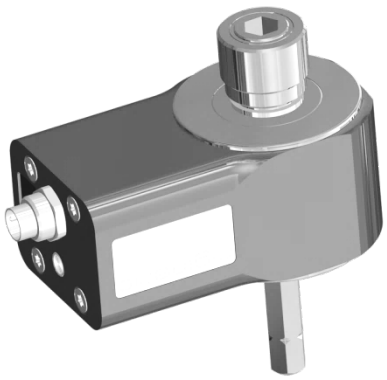

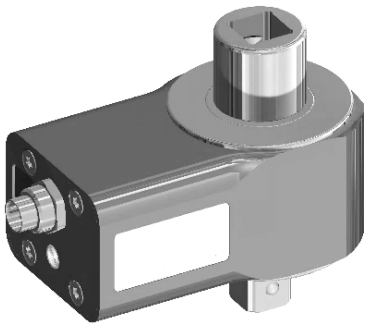

Article Number	Type	Torque Range Nm	USB	Encoder	*ng-Link*	Drive
01-01-00202-01	ng-eTTR200-xu	+/- 2	✓	✓	-	¼“ Hexagon
01-01-00206-01	ng-eTTR200-xr	+/- 2	✓	✓	✓	¼“ Hexagon
01-01-00203-01	ng-eTTR500-xu	+/- 5	✓	✓	-	¼“ Hexagon
01-01-00207-01	ng-eTTR500-xr	+/- 5	✓	✓	✓	¼“ Hexagon
01-01-00204-01	ng-eTTR1000-xu	+/- 10	✓	✓	-	¼“ Hexagon
01-01-00208-01	ng-eTTR1000-xr	+/- 10	✓	✓	✓	¼“ Hexagon
01-01-00205-02	ng-eTTR2000-xu	+/- 20	✓	✓	-	¼“ Hexagon
01-01-00209-02	ng-eTTR2000-xr	+/- 20	✓	✓	✓	¼“ Hexagon
01-01-00159-01	ng-eTTR5000-qu	+/- 50	✓	✓	-	⅜“ Square
01-01-00323-01	ng-eTTR5000-qr	+/- 50	✓	✓	✓	⅜“ Square

With double-sided mounting flanges

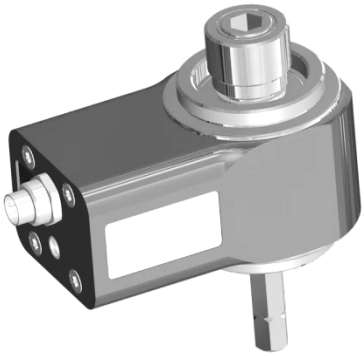

Article Number	Type	Torque Range Nm	USB	Encoder	*ng-Link*	Drive
01-01-00211-01	ng-eTTR200-xf	+/- 2	✓	✓	✓	¼“ Hexagon
01-01-00212-01	ng-eTTR500-xf	+/- 5	✓	✓	✓	¼“ Hexagon
01-01-00213-01	ng-eTTR1000-xf	+/- 10	✓	✓	✓	¼“ Hexagon
01-01-00214-02	ng-eTTR2000-xf	+/- 20	✓	✓	✓	¼“ Hexagon
01-01-00322-01	ng-eTTR5000-qf	+/- 50	✓	✓	✓	⅜“ Square

Accessories

Cable ng-eTTR / USB-A 1.8 m

Article Number	01-90-00008-01

Sensor lock ng-eTTR hexagon 6.35

Article Number	01-92-00116-01

Torque Range	Torque Measurement Accuracy related to full scale value
+/- 2 Nm	0.2
+/- 5 Nm	0.2
+/- 10 Nm	0.2
+/- 20 Nm	0.2
+/- 50 Nm	0.2

- Encoder Resolution: 0.1 Degrees
- Encoder Accuracy: 0.5 Degrees
- Max. Speed: 8.000 RPM
- Operating Temperature: 0 °C to +40 °C (+32 °F to 104 °F)

Dimensions and Weigth:

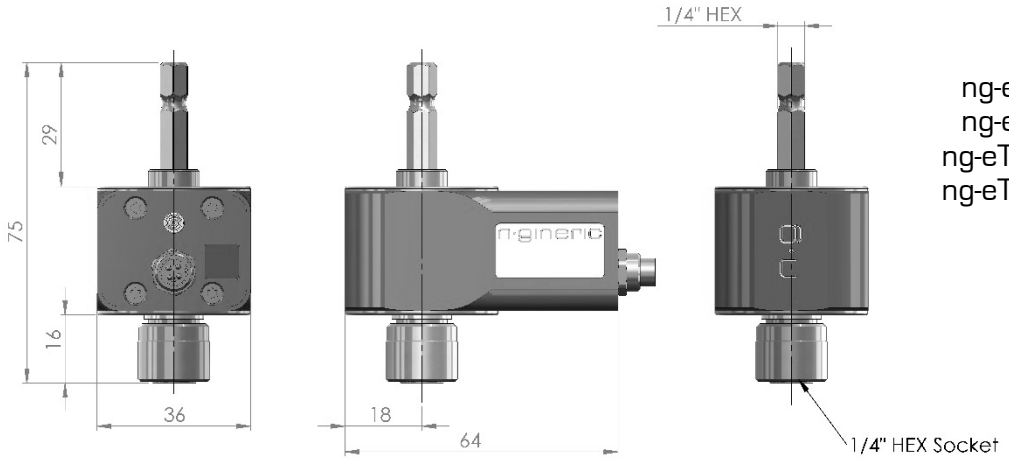

ng-eTTR200-xu
ng-eTTR500-xu
ng-eTTR1000-xu
ng-eTTR2000-xu

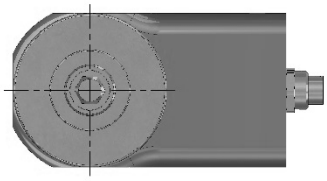

ng-eTTR200-xr
ng-eTTR500-xr
ng-eTTR1000-xr
ng-eTTR2000-xr

Weight: 0,19 kg

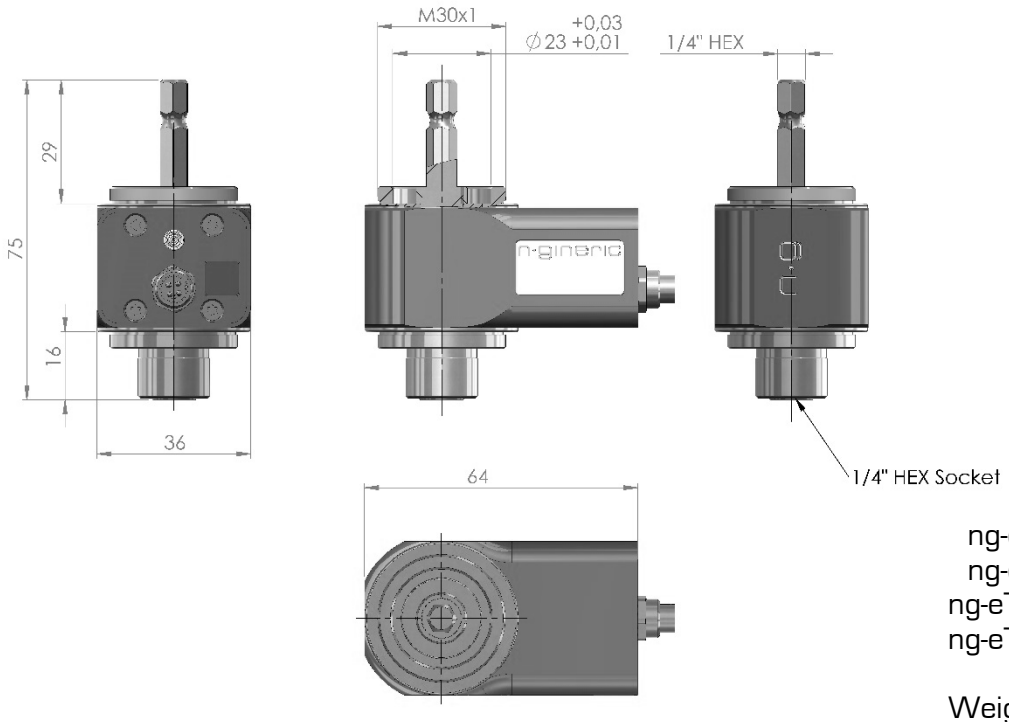

ng-eTTR200-xf
ng-eTTR500-xf
ng-eTTR1000-xf
ng-eTTR2000-xf

Weight: 0,19 kg

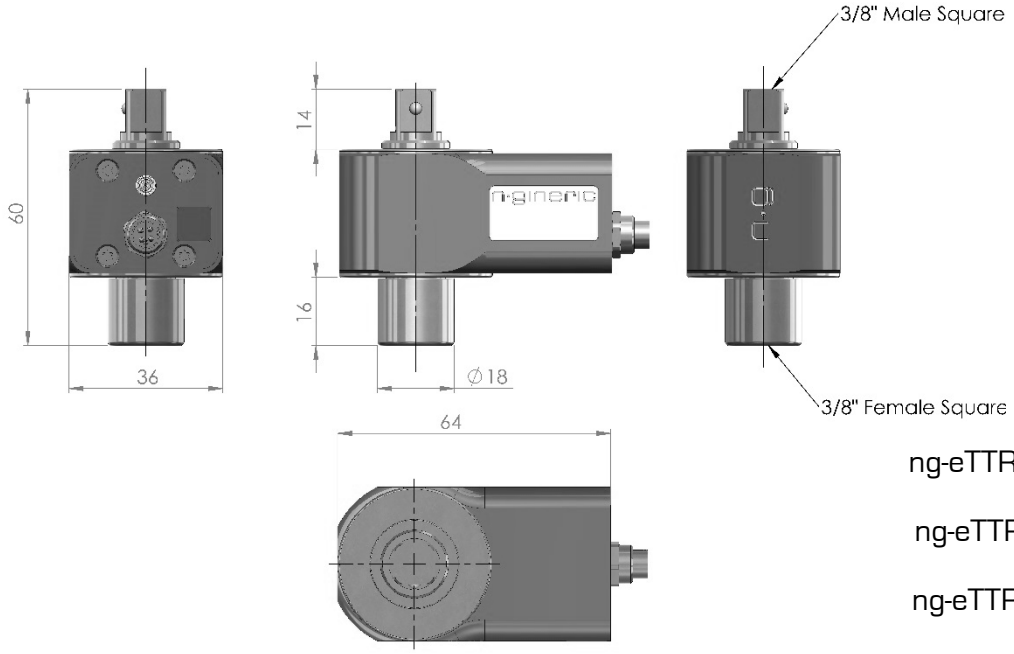

ng-eTTR5000-qu

ng-eTTR5000-qt

ng-eTTR5000-qr

Weight: 0,19 kg

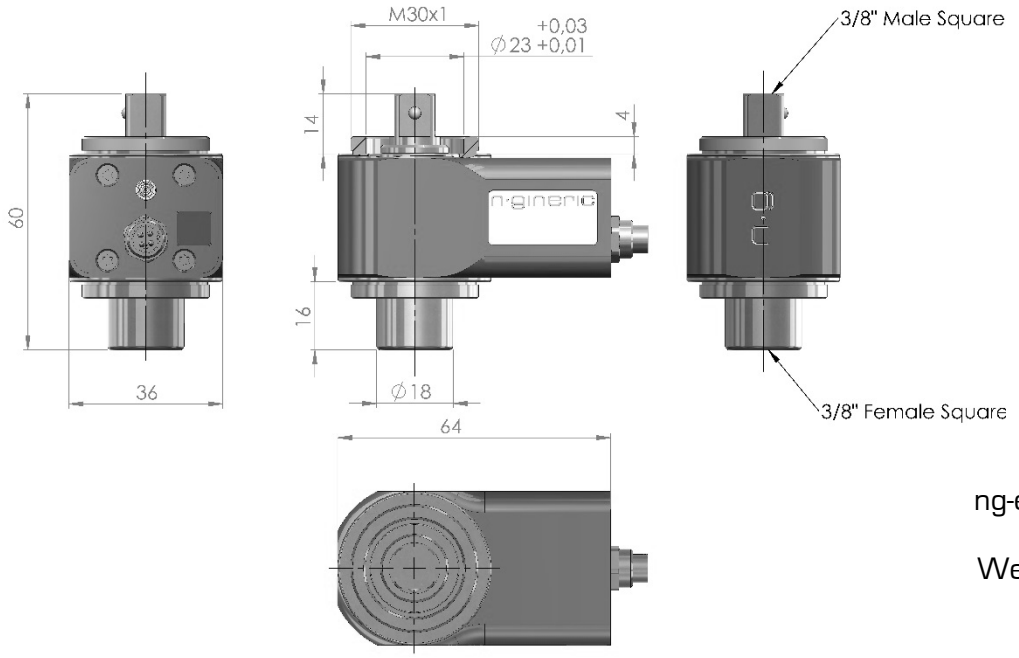

ng-eTTR5000-qf

Weight: 0,21 kg

2.5 Stationary Torque Sensors ng-TTS-i

- High precision torque sensors based on strain gauges
- USB Interface
- Ethernet Interface
- *ng-Link* Interface
- Torque window control with LED
- Mechanical overload protection clutch MOPC (sensors up to 200 cNm range)
- Standard USB and Ethernet connectors
- Maintenance free

Article Number	Type	Torque Range cNm	Interface	MOPC	Drive
01-01-00042-01	ng-TTS01-ci	+/- 1	intelligent	✓	3 mm Bore
01-01-00015-01	ng-TTS02-ci	+/- 2	intelligent	✓	3 mm Bore
01-01-00016-01	ng-TTS05-ci	+/- 5	intelligent	✓	3 mm Bore
01-01-00017-01	ng-TTS10-ci	+/- 10	intelligent	✓	3 mm Bore
01-01-00018-01	ng-TTS20-ci	+/- 20	intelligent	✓	3 mm Bore

Article Number	Type	Torque Range cNm	Interface	MOPC	Drive
01-01-00019-01	ng-TTS50-xi	+/- 50	intelligent	✓	¼“ Hexagon
01-01-00020-01	ng-TTS100-xi	+/- 100	intelligent	✓	¼“ Hexagon
01-01-00021-01	ng-TTS200-xi	+/- 200	intelligent	✓	¼“ Hexagon
01-01-00022-01	ng-TTS500-xi	+/- 500	intelligent	-	¼“ Hexagon
01-01-00023-01	ng-TTS1000-xi	+/- 1000	intelligent	-	¼“ Hexagon
01-01-00075-01	ng-TTS2000-xi	+/- 2000	intelligent	-	¼“ Hexagon

Article Number	Type	Torque Range Nm	Interface	MOPC	Drive
01-01-00076-01	ng-TTS5000-qi	+/- 50	intelligent	-	⅜“ Square
01-01-00637-01	ng-TTS5000-qis	+/- 50	intelligent	-	⅜“ Square

Article Number	Type	Torque Range Nm	Interface	MOPC	Drive
01-01-00612-01	ng-TTS10000-qis	+/- 100	intelligent	-	½“ Square
01-01-00613-01	ng-TTS12000-qis	+/- 120	intelligent	-	½“ Square
01-01-00614-01	ng-TTS20000-qis	+/- 200	intelligent	-	½“ Square

Article Number	Type	Torque Range Nm	Interface	MOPC	Drive
01-01-00170-01	ng-TTS50000-qi	+/- 500	intelligent	-	¾“ Square
01-01-00320-01	ng-TTS75000-qi	+/- 750	intelligent	-	¾“ Square
01-01-00210-01	ng-TTS100000-qi	+/- 1000	intelligent	-	¾“ Square
01-01-00660-01	ng-TTS50000-qis	+/- 500	intelligent	-	¾“ Square
01-01-00674-01	ng-TTS75000-qis	+/- 750	intelligent	-	¾“ Square
01-01-00675-01	ng-TTS100000-qis	+/- 1000	intelligent	-	¾“ Square

2.6 Stationary Torque Sensors ng-TTS-u

- High precision torque sensors based on strain gauges
- USB Interface
- Torque window control with LED
- Mechanical overload protection clutch MOPC (sensors up to 200 cNm range)
- Standard USB connector
- Maintenance free

Article Number	Type	Torque Range cNm	Interface	MOPC	Drive
01-01-00105-01	ng-TTS01-cu	+/- 1	USB	✓	3 mm Bore
01-01-00106-01	ng-TTS02-cu	+/- 2	USB	✓	3 mm Bore
01-01-00107-01	ng-TTS05-cu	+/- 5	USB	✓	3 mm Bore
01-01-00108-01	ng-TTS10-cu	+/- 10	USB	✓	3 mm Bore
01-01-00109-01	ng-TTS20-cu	+/- 20	USB	✓	3 mm Bore
01-01-00110-01	ng-TTS50-xu	+/- 50	USB	✓	¼“ Hexagon
01-01-00111-01	ng-TTS100-xu	+/- 100	USB	✓	¼“ Hexagon
01-01-00112-01	ng-TTS200-xu	+/- 200	USB	✓	¼“ Hexagon
01-01-00113-01	ng-TTS500-xu	+/- 500	USB	-	¼“ Hexagon
01-01-00114-01	ng-TTS1000-xu	+/- 1000	USB	-	¼“ Hexagon
01-01-00115-01	ng-TTS2000-xu	+/- 2000	USB	-	¼“ Hexagon
01-01-00116-01	ng-TTS5000-qu	+/- 5000	USB	-	⅜“ Square

Article Number	Type	Torque Range Nm	Interface	MOPC	Drive
01-01-00171-02	ng-TTS10000-qu	+/- 100	USB	-	½“ Square

Torque Range	Torque Measurement Accuracy related to full scale value
+/- 1 cNm	1.0
+/- 2 cNm	0.5
+/- 5 cNm	0.2
+/- 10 cNm	0.2
+/- 20 cNm	0.2
+/- 50 cNm	0.2
+/- 1 Nm	0.2
+/- 2 Nm	0.1
+/- 5 Nm	0.1
+/- 10 Nm	0.1
+/- 20 Nm	0.1
+/- 50 Nm	0.1
+/- 100 Nm	0.1
+/- 200 Nm	0.1
+/- 500 Nm	0.1
+/- 1000 Nm	0.2

- Operating Temperature: 0 °C to +40 °C (+32 °F to 104 °F)

Dimensions and Weigth:

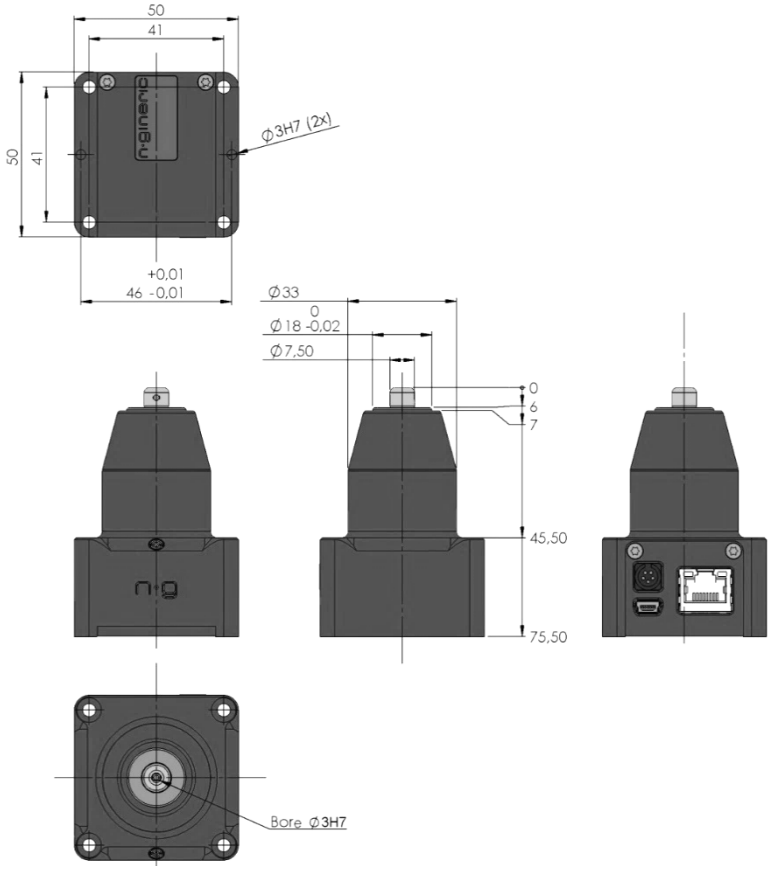

ng-TTS01-ci
ng-TTS02-ci
ng-TTS05-ci
ng-TTS10-ci
ng-TTS20-ci

ng-TTS01-cu
ng-TTS02-cu
ng-TTS05-cu
ng-TTS10-cu
ng-TTS20-cu

Weight: 0,22 kg

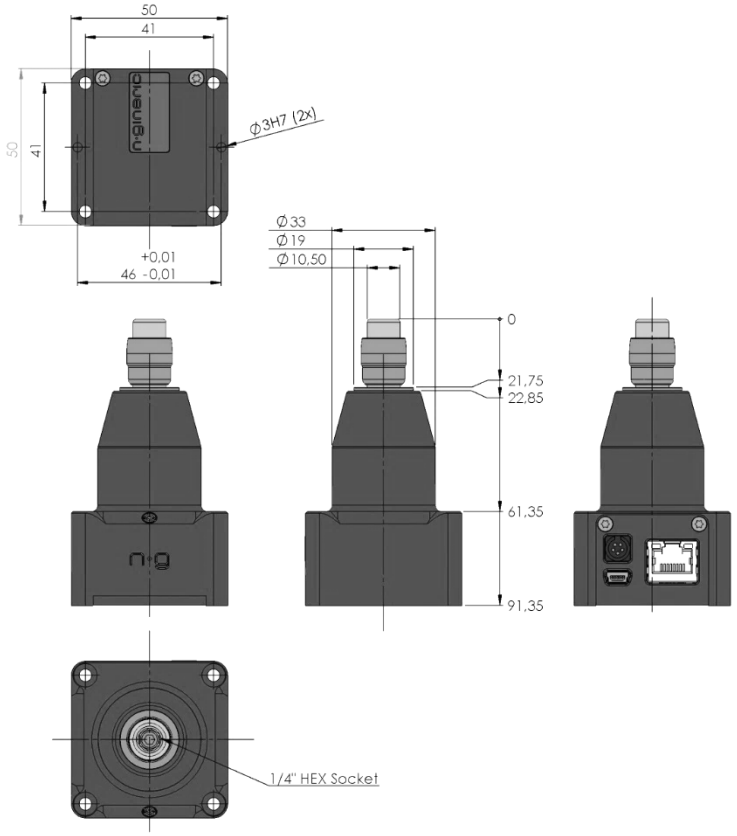

ng-TTS50-xi
ng-TTS100-xi
ng-TTS200-xi
ng-TTS500-xi
ng-TTS1000-xi
ng-TTS2000-xi

ng-TTS50-xu
ng-TTS100-xu
ng-TTS200-xu
ng-TTS500-xu
ng-TTS1000-xu
ng-TTS2000-xu

Weight: 0,25 kg

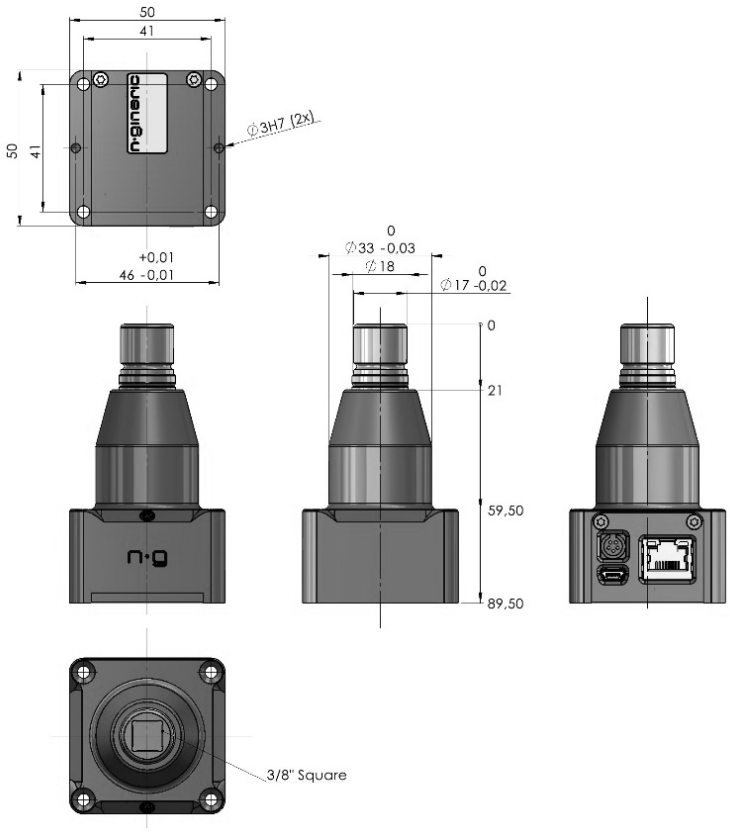

ng-TTS5000-qi

ng-TTS5000-qu

ng-TTS5000-qis

Weight: 0,28 kg

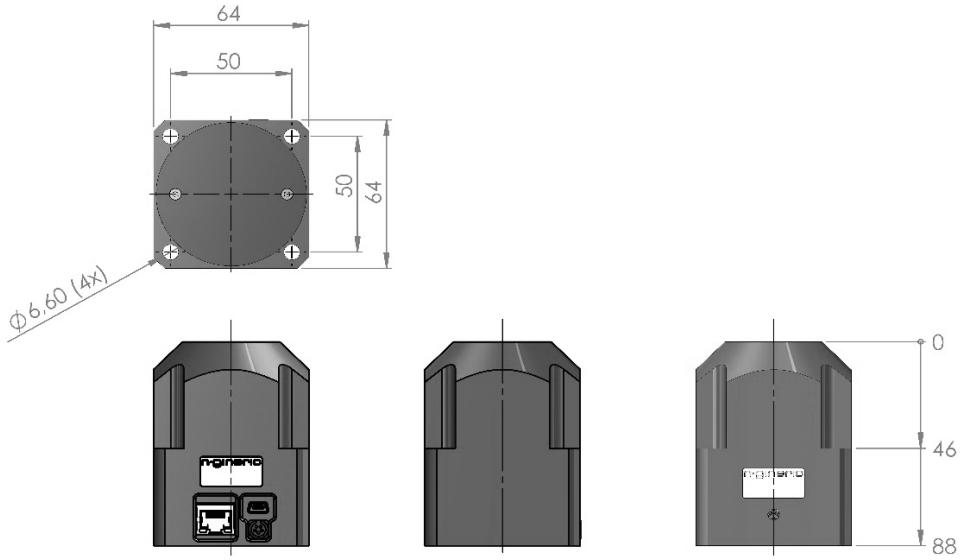

ng-TTS10000-qis
ng-TTS12000-qis
ng-TTS20000-qis

ng-TTS10000-qu

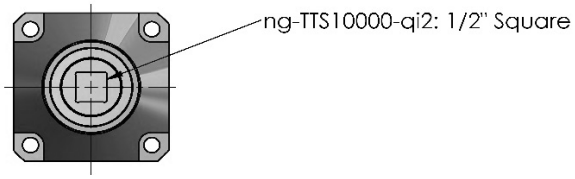

Weight: 0,77 kg

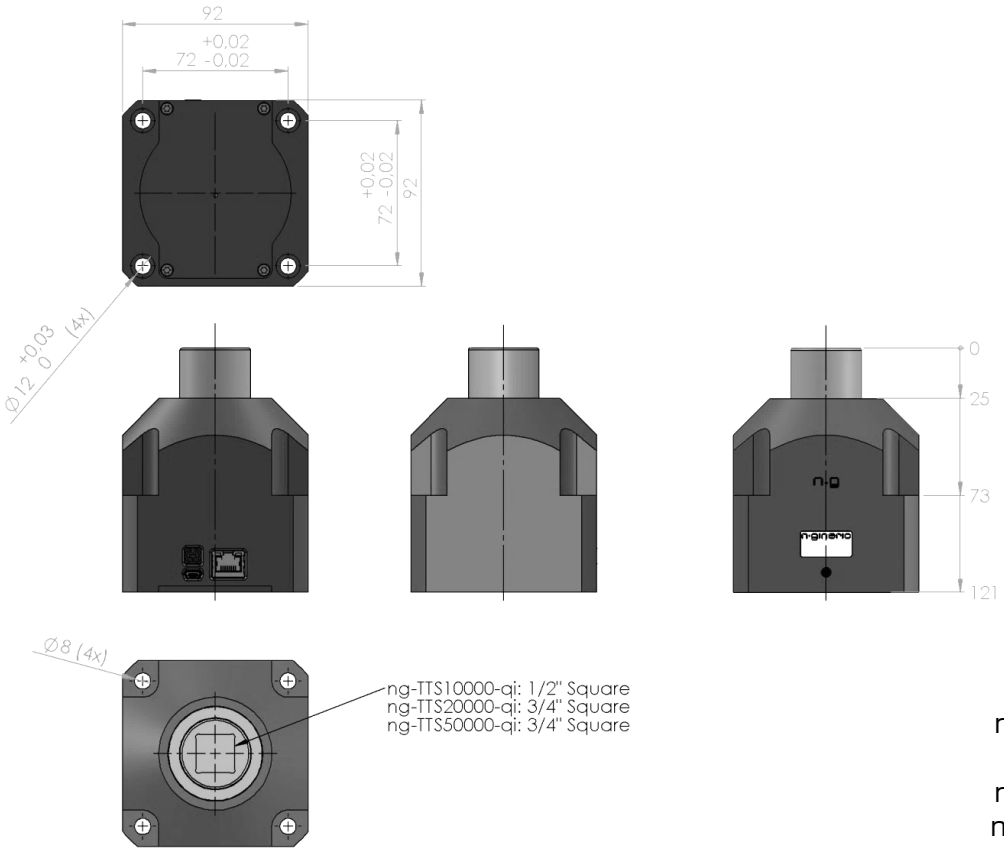

ng-TTS50000-qi
ng-TTS50000-qis
ng-TTS75000-qi
ng-TTS75000-qis
ng-TTS100000-qi
ng-TTS100000-qis

Weight: 2,26 kg

2.7 Stationary Torque Sensors ng-TTS-a

- High precision torque sensors based on strain gauges
- Mechanical overload protection clutch MOPC (sensors up to 200 cNm range)
- Analog torque output signal options:
  - 0 to 5 V, zero point at 2.5 V
  - 0 to 10 V, zero point at 5 V
- Power supply 12 V DC +/- 5 %, 150 mA
- External measuring device required
- Maintenance free

Article Number	Type	Torque Range cNm	Interface	MOPC	Drive
01-01-00062-01	ng-TTS01-ca	+/- 1	analog	✓	3 mm Bore
01-01-00063-01	ng-TTS02-ca	+/- 2	analog	✓	3 mm Bore
01-01-00035-01	ng-TTS05-ca	+/- 5	analog	✓	3 mm Bore
01-01-00002-01	ng-TTS10-ca	+/- 10	analog	✓	3 mm Bore
01-01-00065-01	ng-TTS20-ca	+/- 20	analog	✓	3 mm Bore

Article Number	Type	Torque Range cNm	Interface	MOPC	Drive
01-01-00066-01	ng-TTS50-xa	+/- 50	analog	✓	¼“ Hexagon
01-01-00067-01	ng-TTS100-xa	+/- 100	analog	✓	¼“ Hexagon
01-01-00068-01	ng-TTS200-xa	+/- 200	analog	✓	¼“ Hexagon
01-01-00013-01	ng-TTS500-xa	+/- 500	analog	-	¼“ Hexagon
01-01-00014-01	ng-TTS1000-xa	+/- 1000	analog	-	¼“ Hexagon
01-01-00144-01	ng-TTS2000-xa	+/- 2000	analog	-	¼“ Hexagon

Article Number	Type	Torque Range Nm	Interface	MOPC	Drive
01-01-00145-01	ng-TTS5000-qa	+/- 50	analog	-	⅜“ Square

Accessories

Sensor cable for analog interface, with single-sided connector, 1.5 meters

Article Number	01-90-00021-01

Torque Range	Torque Measurement Accuracy related to full scale value
+/- 1 cNm	1.0
+/- 2 cNm	0.5
+/- 5 cNm	0.2
+/- 10 cNm	0.2
+/- 20 cNm	0.2
+/- 50 cNm	0.2
+/- 1 Nm	0.2
+/- 2 Nm	0.1
+/- 5 Nm	0.1
+/- 10 Nm	0.1
+/- 20 Nm	0.1
+/- 50 Nm	0.1
+/- 100 Nm	0.1
+/- 200 Nm	0.1
+/- 500 Nm	0.1
+/- 1000 Nm	0.2

- Operating Temperature: 0 °C to +40 °C (+32 °F to 104 °F)

Dimensions and Weigth:

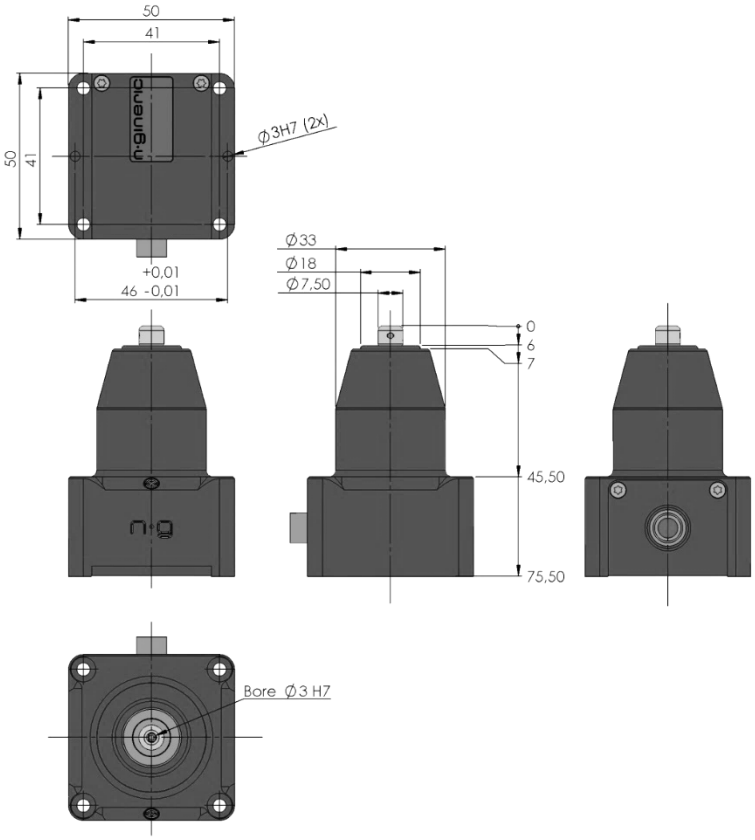

ng-TTS01-ca
ng-TTS02-ca
ng-TTS05-ca
ng-TTS10-ca
ng-TTS20-ca

Weight: 0,22 kg

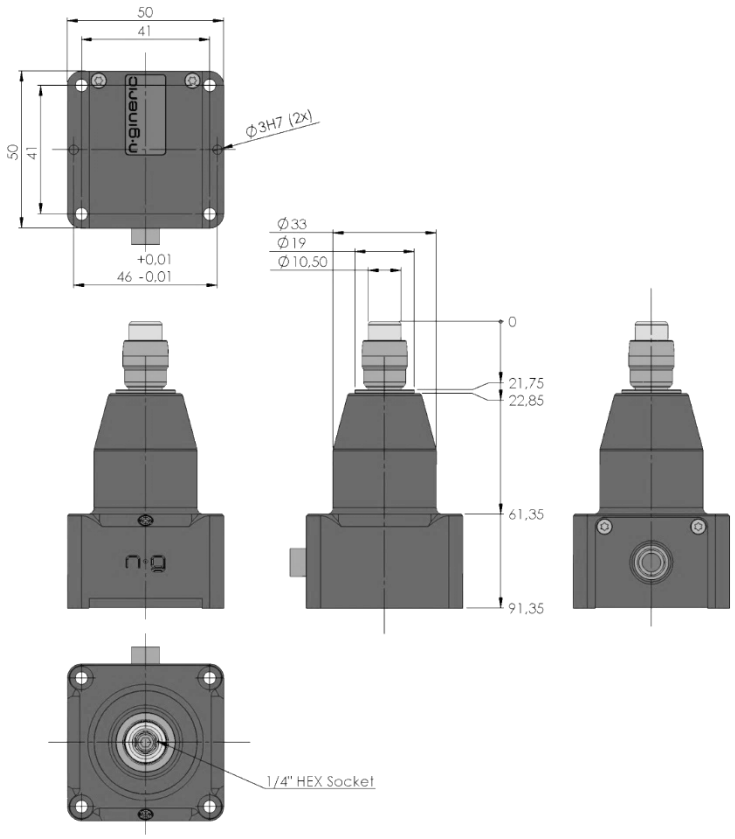

ng-TTS50-xa
ng-TTS100-xa
ng-TTS200-xa
ng-TTS500-xa
ng-TTS1000-xa
ng-TTS2000-xa

Weight: 0,25 kg

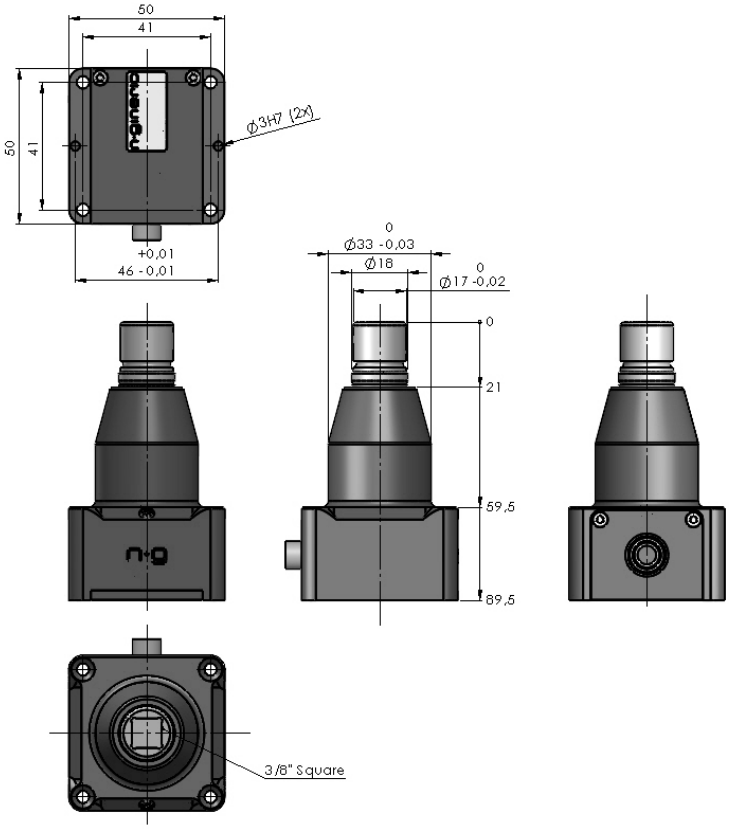

ng-TTS5000-qa

Masse: 0,25 kg

2.8 Handheld Torque Sensors ng-TTH-i

- High precision torque sensors based on strain gauges
- USB Interface
- Ethernet Interface
- *ng-Link* Interface
- Torque window control with LED
- Mechanical overload protection clutch MOPC
- Standard USB and Ethernet connectors
- Maintenance free

Sensor nomenclature: see page 33

Article Number	Type	Torque Range cNm	Interface	MOPC	Drive
01-01-00030-01	ng-TTH01-ci	+/- 1	intelligent	✓	3 mm Bore
01-01-00031-01	ng-TTH02-ci	+/- 2	intelligent	✓	3 mm Bore
01-01-00032-01	ng-TTH05-ci	+/- 5	intelligent	✓	3 mm Bore
01-01-00033-01	ng-TTH10-ci	+/- 10	intelligent	✓	3 mm Bore
01-01-00034-01	ng-TTH20-ci	+/- 20	intelligent	✓	3 mm Bore

Article Number	Type	Torque Range cNm	Interface	MOPC	Drive
01-01-00043-01	ng-TTH50-xi	+/- 50	intelligent	✓	¼“ Hexagon
01-01-00044-01	ng-TTH100-xi	+/- 100	intelligent	✓	¼“ Hexagon
01-01-00045-01	ng-TTH200-xi	+/- 200	intelligent	✓	¼“ Hexagon

2.9 Handheld Torque Sensors ng-TTH-a

- High precision torque sensors based on strain gauges
- Mechanical overload protection MOPC
- Analog torque output signal options:
  - 0 to 5 V, zero point at 2.5 V
  - 0 to 10 V, zero point at 5 V
- Power supply 12 V DC +/- 5 %, 150 mA
- External measuring device required
- Maintenance free

Article Number	Type	Torque Range cNm	Interface	MOPC	Drive
01-01-00025-01	ng-TTH01-ca	+/- 1	analog	✓	3 mm Bore
01-01-00026-01	ng-TTH02-ca	+/- 2	analog	✓	3 mm Bore
01-01-00027-01	ng-TTH05-ca	+/- 5	analog	✓	3 mm Bore
01-01-00028-01	ng-TTH10-ca	+/- 10	analog	✓	3 mm Bore
01-01-00029-01	ng-TTH20-ca	+/- 20	analog	✓	3 mm Bore

Article Number	Type	Torque Range cNm	Interface	MOPC	Drive
01-01-00069-01	ng-TTH50-xa	+/- 50	analog	✓	¼“ Hexagon
01-01-00070-01	ng-TTH100-xa	+/- 100	analog	✓	¼“ Hexagon
01-01-00071-01	ng-TTH200-xa	+/- 200	analog	✓	¼“ Hexagon

Accessories

Sensor cable for analog interface, with single-sided connector, 1.5 meters

Article Number	01-90-00021-01

Dimensions and Weigth:

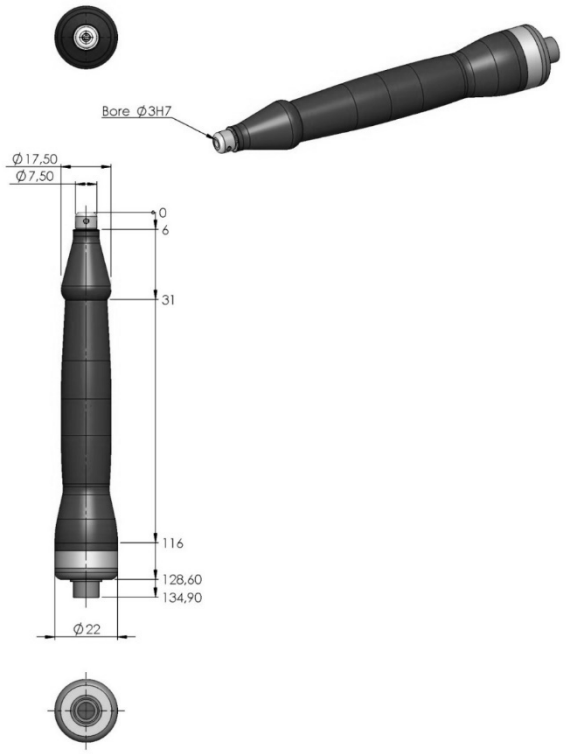

ng-TTH01-ci	ng-TTH01-ca
ng-TTH02-ci	ng-TTH02-ca
ng-TTH05-ci	ng-TTH05-ca
ng-TTH10-ci	ng-TTH10-ca
ng-TTH20-ci	ng-TTH20-ca

Weight Handpiece: 0,05 kg

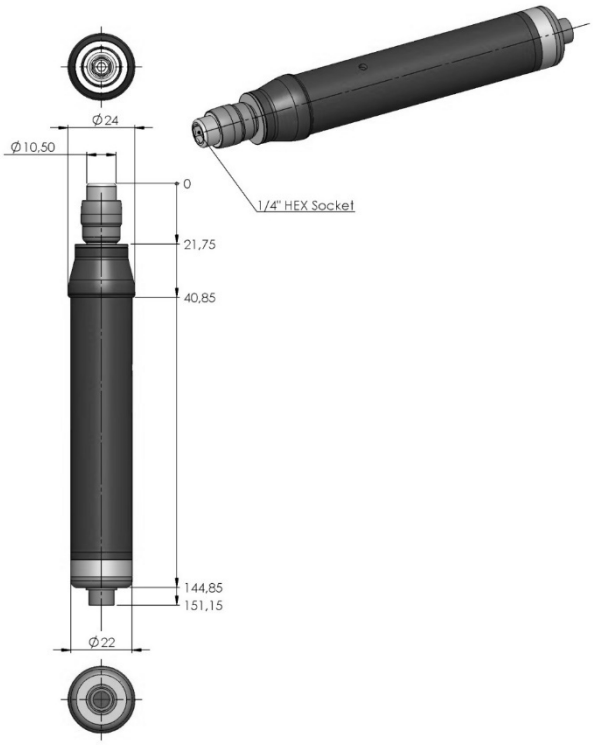

ng-TTH50-xi	ng-TTH50-xa
ng-TTH100-xi	ng-TTH100-xa
ng-TTH200-xi	ng-TTH200-xa

Weight Handpiece: 0,05 kg

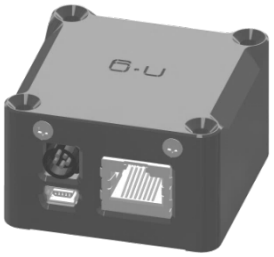

The **ng-TTH-ci** sensors are supplied with the interface electronics **ng-TC-ai**.

3 Intelligent Force Sensors

- Based on Strain Gauge Technology
- Digital and Analog Interfaces

- Compression Force Sensors
- Donut-shaped Compression Force Sensors
- Compression and Tension Force Sensors

Measurement Ranges:

100 N
...
200 kN

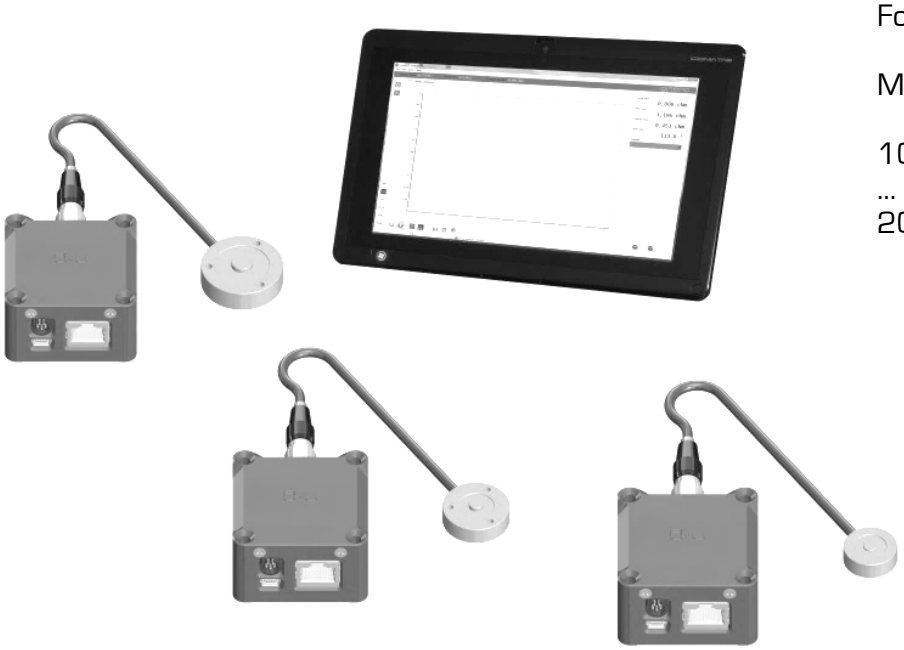

The sensor interface is optionally equipped with an input for an incremental encoder to measure the displacement. Please let us know your demands.

Force Sensor Type Nomenclature:

ng-FTS-□□□-□□
- i = intelligent (USB + Ethernet + *ng-Link*)
- b = button load cell (compression force)
- d = donut shape load cell (compression force)
- Measurement range in N
- S = Stationary
- FT = Force Transducer
- ng = n-gineric Product

3.1 Compression Force Load Cells ng-FTS-bi

- High precision button load cells based on strain gauges
- USB Interface
- Ethernet Interface
- *ng-Link* Interface
- Force window control
- Standard USB and Ethernet connectors

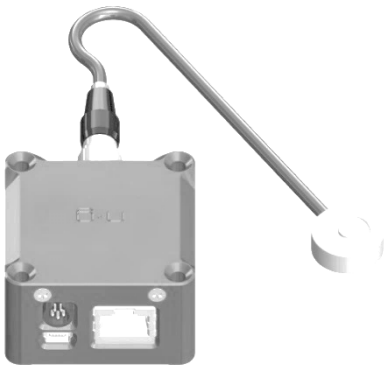

Article Number	Type	Force Range N	Interface	Size mm	Measurement Accuracy (*)
01-01-00126-01	ng-FTS100-bi	100	intelligent	∅ 31.8 x 9.9	0.25 %
01-01-00127-01	ng-FTS200-bi	200	intelligent	∅ 31.8 x 9.9	0.25 %
01-01-00547-01	ng-FTS500-bi	500	intelligent	∅ 31.8 x 9.9	0.25 %
01-01-00129-01	ng-FTS1000-bi	1000	intelligent	∅ 31.8 x 9.9	0.25 %

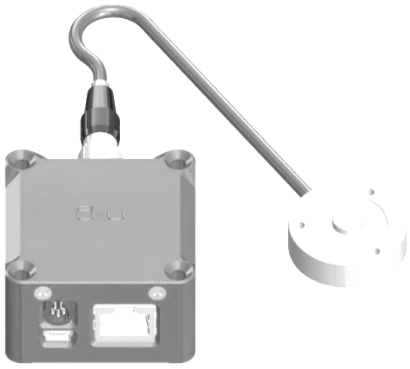

Article Number	Type	Force Range kN	Interface	Size mm	Measurement Accuracy (*)
01-01-00153-01	ng-FTS2000-bi	2	intelligent	∅ 31.8 x 9.9	0.5 %
01-01-00177-01	ng-FTS5000-bi	5	intelligent	∅ 31.8 x 9.9	0.5 %
01-01-00132-01	ng-FTS10000-bi	10	intelligent	∅ 31.8 x 9.9	0.5 %
01-01-00084-01	ng-FTS20000-bi	20	intelligent	∅ 38.1 x 16.0	0.5 %
01-01-00633-01	ng-FTS50000-bi	50	intelligent	∅ 38.1 x 16.0	0.5 %

(*) refer to the measurement range

Dimensions:

ng-FTS100-bi
ng-FTS200-bi
ng-FTS500-bi
ng-FTS1000-bi
ng-FTS2000-bi
ng-FTS5000-bi
ng-FTS10000-bi

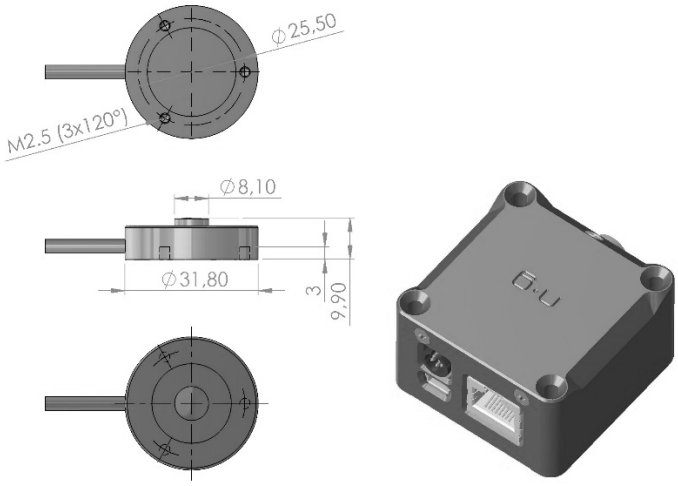

3.2 Compression Force Load Cells ng-FTS-di

- High precision button load cells based on strain gauges
- USB Interface
- Ethernet Interface
- *ng-Link* Interface
- Force window control
- Standard USB and Ethernet connectors

Article Number	Type	Force Range kN	Interface	Size mm	Drilling	Measurement Accuracy (*)
01-01-00156-02	ng-FTS1000-di	1	intelligent	∅ 38.0 x 10.0	∅ 7.0	2 %
01-01-00180-01	ng-FTS2000-di	2	intelligent	∅ 38.0 x 10.0	∅ 7.0	2 %
01-01-00172-01	ng-FTS5000-di	5	intelligent	∅ 38.0 x 10.0	∅ 7.0	2 %
01-01-00184-01	ng-FTS10000-di	10	intelligent	∅ 38.0 x 10.0	∅ 7.0	2 %
01-01-00185-01	ng-FTS20000-di	20	intelligent	∅ 49.0 x 16.0	∅ 15.0	2 %
01-01-00186-01	ng-FTS50000-di	50	intelligent	∅ 49.0 x 16.0	∅ 15.0	2 %

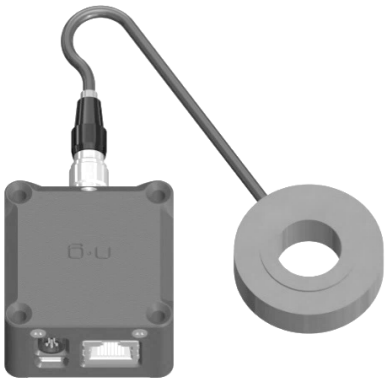

Article Number	Type	Force Range kN	Interface	Size mm	Drilling	Measurement Accuracy (*)
01-01-00157-01	ng-FTS100000-di	100	intelligent	∅ 78.0 x 25.0	∅ 28.0	2 %
01-01-00167-01	ng-FTS200000-di	200	intelligent	∅ 78.0 x 25.0	∅ 28.0	2 %

(*) refer to the measurement range

Donut Shape Load Cells ng-FTS-d

- Measurement Accuracy: 3 % of the F.S.R.
- Operating Overload: 120 % of the F.S.R.
- Safe Overload: 150 % of the F.S.R.
- Operating Temperature 0 °C to +80 °C (+32 °F to 176 °F)

4 Sensor Torque Driver Systems

4.1 Handheld Sensor Torque Drivers ng-µTDH

- Components integrated in the handpiece:
- Static strain-gage based torque sensor
- Incremental angle encoder
- Brushless DC Motor
- Planetary gearbox
- PCB-Assembly providing the following functions:
  - Torque measurement signal conditioning and 24-bit analog to digital conversion
  - Encoder readout
  - Data communication to the main control board
  - Hand button signalizing
- Main control board mounted in the foot housing
- Vacuum suction through the handpiece
- Housing parts made of anodized aluminum and stainless steel

The Adaptive Screw Tightening Strategy provides the detection of the snug torque during the rundown of the screw. Depending on the snug torque, an additional constant or proportionate amount of torque can be applied to the screw joint to achieve repeatable clamping force.

Torque Driver Nomenclature:

```
ng-µTDH□□-□□
|      |      | |      | └ u = USB direct
|      |      | |      | └ i = with ng-TDC Interface
|      |      | |      └ c = cylindric bore for bit holder attachment
|      |      | └ Torque Range in cNm
|      |      └ H = Handheld
|      └ µTD = µ Torque Driver
└ ng = n-gineric Product
```

Handheld Sensor Torque Driver ng-µTDH-cu

ng-µTDH05-cu Sensor Torque Driver System

Article Number	01-01-00592-01
Torque Range	5 to 50 mNm
Torque Measurement Accuracy	3 % of the F.S.R.
Angle Measurement Resolution	0.1 Degrees
RPM Range	100 bis 1,000 min^{-1}
Bit Drive	1.5 mm cylindric
Handpiece Dimensions	144 x Ø 25 mm
Handpiece Weight	0.17 kg
Interface	USB

Scope of Supply

Type	Description	Article Number
ng-µTDH05-cu Spindle	Torque Driver Handpiece	01-01-00593-01
ng-µTDH05-cu Controller	Controller	01-01-00594-01
ng-TD-PS-15/40	Power Supply Unit	01-91-00007-01
ng-TD-Cable 2,0 m	Driver Cable 2 meters	01-90-00011-01
Cable USB-A/USB-Mini-B 1.8 m	USB- Cable	01-90-00002-01
n-quirer TD	Torque Driver System Software	01-01-00215-01

ng-µTDH08-cu Sensor Torque Driver System

Article Number	01-01-00639-01
Torque Range	8 to 80 mNm
Torque Measurement Accuracy	3 % of the F.S.R.
Angle Measurement Resolution	0.1 Degrees
RPM Range	100 bis 1,000 min^{-1}
Bit Drive	1.5 mm cylindric
Handpiece Dimensions	144 x Ø 25 mm
Handpiece Weight	0.17 kg
Interface	USB

Scope of Supply

Type	Description	Article Number
ng-µTDH08-cu Spindle	Torque Driver Handpiece	01-01-00640-01
ng-µTDH08-cu Controller	Controller	01-01-00594-01
ng-TD-PS-24/80	Power Supply Unit	01-91-00006-01
ng-TD-Cable 2,0 m	Driver Cable 2 meters	01-90-00011-01
Cable USB-A/USB-Mini-B 1.8 m	USB- Cable	01-90-00002-01
n-quirer TD	Torque Driver System Software	01-01-00215-01

Handheld Sensor Torque Driver ng-µTDH-ci

ng-µTDH05-ci Sensor Torque Driver System

Article Number	01-01-00596-01
Torque Range	5 to 50 mNm
Torque Measurement Accuracy	3 % of the F.S.R.
Angle Measurement Resolution	0.1 Degrees
RPM Range	100 bis 1,000 min^{-1}
Bit Drive	1.5 mm cylindric
Handpiece Dimensions	144 x Ø 25 mm
Handpiece Weight	0.17 kg
Interface	USB, Ethernet, Modbus/TCP, RS-232, Digital-I/O

Scope of Supply

Type	Description	Article Number
ng-µTDH05-ci Spindle	Torque Driver Handpiece	01-01-00635-01
ng-µTDH05-ci Controller	Controller	01-01-00595-01
ng-TD-PS-15/40	Power Supply Unit	01-91-00007-01
ng-TDC	Torque Driver Controller Interface	01-01-00220-01
ng-TD- Cable 3.0 m	Driver Cable 3 meters	01-90-00014-01
ng-TD- Cable 2.0 m	Driver Cable 2 meters	01-90-00011-01
Cable USB-A/USB-Mini-B 1.8 m	USB- Cable	01-90-00002-01
n-quirer TD	Torque Driver System Software	01-01-00215-01

ng-µTDH08-ci Sensor Torque Driver System

Article Number	01-01-00642-01
Torque Range	8 to 80 mNm
Torque Measurement Accuracy	3 % of the F.S.R.
Angle Measurement Resolution	0.1 Degrees
RPM Range	100 bis 1,000 min^{-1}
Bit Drive	1.5 mm cylindric
Handpiece Dimensions	144 x Ø 25 mm
Handpiece Weight	0.17 kg
Interface	USB, Ethernet, Modbus/TCP, RS-232, Digital-I/O

Scope of Supply

Type	Description	Article Number
ng-µTDH08-ci Spindle	Torque Driver Handpiece	01-01-00643-01
ng-µTDH08-ci Controller	Controller	01-01-00595-01
ng-TD-PS-24/80	Power Supply Unit	01-91-00006-01
ng-TDC	Torque Driver Controller Interface	01-01-00220-01
ng-TD- Cable 3.0 m	Driver Cable 3 meters	01-90-00014-01
ng-TD- Cable 2.0 m	Driver Cable 2 meters	01-90-00011-01
Cable USB-A/USB-Mini-B 1.8 m	USB- Cable	01-90-00002-01
n-quirer TD	Torque Driver System Software	01-01-00215-01

Dimensions:

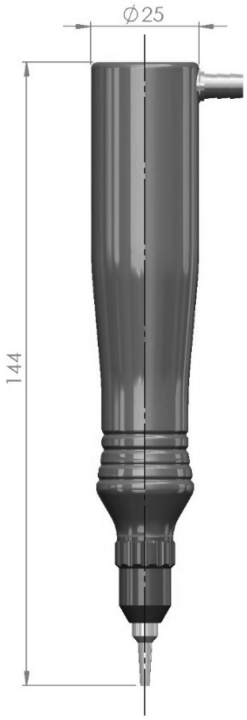

ng-µTDH05-cu
ng-µTDH08-cu

ng-µTDH05-ci
ng-µTDH08-ci

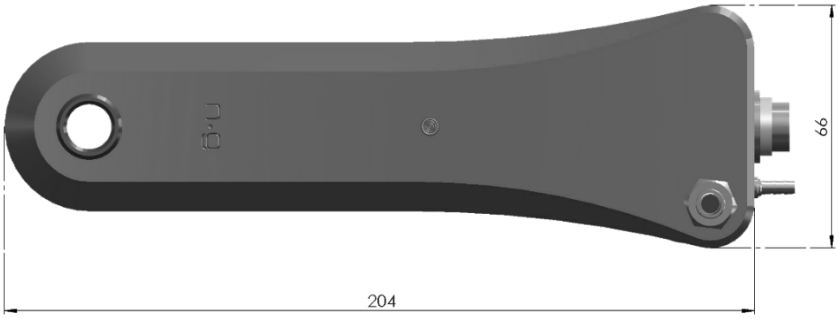

4.2 Handheld Sensor Torque Drivers ng-TDH

- Torque Range:
  - 0.01 – 0.1 Nm
  - 0.02 – 0.2 Nm
  - 0.05 – 0.5 Nm
  - 0.10 – 1.0 Nm

- Ultimate Torque/Angle Measurement Precision:
  - Strain Gauge based Rotary Torque Sensor integrated at the Bit Chuck
  - 24 bits A/D Converter Resolution of the Torque Measurement at the Rotary Part
  - Brushless Digital Signal Transmission from the Rotary to the Stationary Part
  - 0.1 Degrees Resolution of the Angle Measurement directly at the Bit Chuck

- Massive Aluminum Housing
- Brushless DC Motor Technology
- Adaptive Screw Tightening Strategies
- All Controls integrated
- Industry-4.0-compliant
- Precise in measurement and highly productive

The **Adaptive Screw Tightening Strategy** provides the detection of the snug torque during the rundown of the screw. Depending on the snug torque, an additional constant or proportionate amount of torque can be applied to the screw joint to achieve repeatable clamping force.

1 - 10 cNm
2 – 20 cNm
5 – 50 cNm

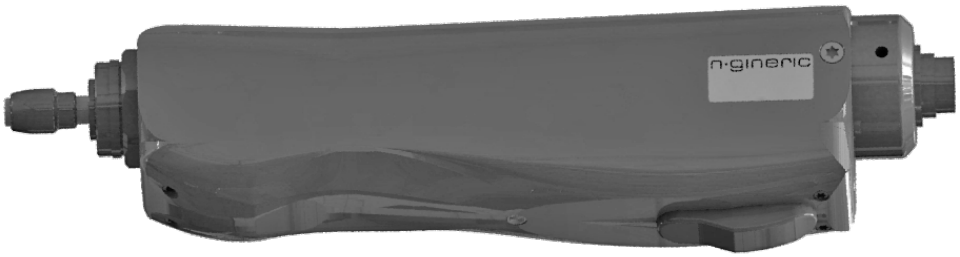

10 – 100 cNm

Inner Structure:

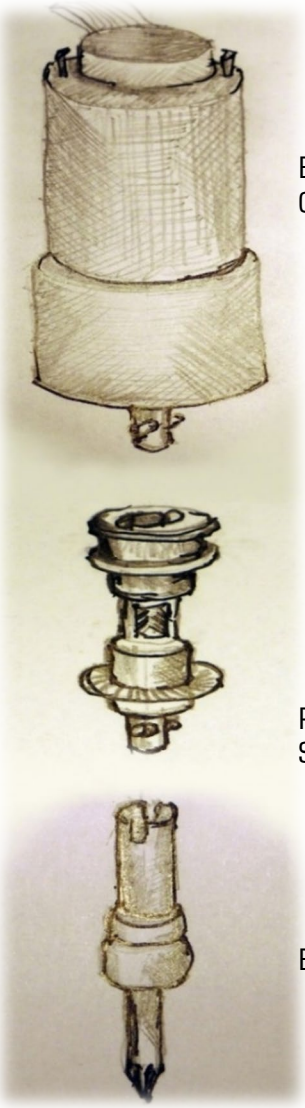

BL-DC Drive with Planetary Gearbox

Rotary Torque/Angle Sensor

Bit Chuck Unit

Torque Driver Nomenclature:

```
ng- TDH□□□-□□
|      |    |  |        | └ u  = USB direct
|      |    |  |        | └ i  = with ng-TDC Interface
|      |    |  |        └ h  = Halfmoon Bit Chuck
|      |    |  |        └ x  = Hexagon Bit Chuck
|      |    |  └ Torque Range in cNm
|      |    └ H = Handheld
|      └ TD = Torque Driver
└ ng = n-gineric Product
```

ng-TDH10-hu Sensor Torque Driver System

Article Number	01-01-00264-01
Torque Range	1 to 10 cNm
Torque Measurement Accuracy	1 % of the F.S.R.
Angle Measurement Resolution	0.1 Degrees
RPM Range	100 to 1,000 min^{-1}
Bit Drive	4 mm Halfmoon
Dimensions	196 x 48 x 25 mm
Weight	0.47 kg
Interface	USB

Scope of Supply

Type	Description	Article Number
ng-TDH10-hu Spindle	Torque Driver Handpiece	01-01-00255-01
ng-TD-PS-24-80	Power Supply Unit	01-91-00006-01
ng-TD-Cable 3 m	Driver Cable 3 meters	01-90-00014-01
USB Cable	Cable USB-A / USB Mini 1.8m	01-90-00002-01
n-quirer TD	Torque Driver System Software	01-01-00215-01

ng-TDH10-hi Sensor Torque Driver System

Article Number	01-01-00265-01
Torque Range	1 to 10 cNm
Torque Measurement Accuracy	1 % of the F.S.R.
Angle Measurement Resolution	0.1 Degrees
RPM Range	100 to 1,000 min^{-1}
Bit Drive	4 mm Halfmoon
Dimensions	196 x 48 x 25 mm
Weight	0.47 kg
Interface	Digital to ng-TDC

Scope of Supply

Type	Description	Article Number
ng-TDH10-hi Spindle	Torque Driver Handpiece	01-01-00254-01
ng-TD-PS-24-80	Power Supply Unit	01-91-00006-01
ng-TD-Cable 3 m	Driver Cable 3 meters	01-90-00014-01
ng-TD-Cable 2 m	Driver Cable 2 meters	01-90-00011-01
ng-TDC	Torque Driver Controller Interface	01-01-00220-01
n-quirer TD	Torque Driver System Software	01-01-00215-01
USB Cable	Cable USB-A / USB Mini 1.8 m	01-90-00002-01

ng-TDH20-hu Sensor Torque Driver System

Article Number	01-01-00266-01
Torque Range	2 to 20 cNm
Torque Measurement Accuracy	1 % of the F.S.R.
Angle Measurement Resolution	0.1 Degrees
RPM Range	100 to 1,000 min^{-1}
Bit Drive	4 mm Halfmoon
Dimensions	196 x 48 x 25 mm
Weight	0.47 kg
Interface	USB

Scope of Supply

Type	Description	Article Number
ng-TDH20-hu Spindle	Torque Driver Handpiece	01-01-00256-01
ng-TD-PS-24-80	Power Supply Unit	01-91-00006-01
ng-TD-Cable 3 m	Driver Cable 3 meters	01-90-00014-01
USB Cable	Cable USB-A / USB Mini 1.8 m	01-90-00002-01
n-quirer TD	Torque Driver System Software	01-01-00215-01

ng-TDH20-hi Sensor Torque Driver System

Article Number	01-01-00267-01
Torque Range	2 to 20 cNm
Torque Measurement Accuracy	1 % of the F.S.R.
Angle Measurement Resolution	0.1 Degrees
RPM Range	100 to 1,000 min^{-1}
Bit Drive	4 mm Halfmoon
Dimensions	196 x 48 x 25 mm
Weight	0.47 kg
Interface	Digital to ng-TDC

Scope of Supply

Type	Description	Article Number
ng-TDH20-hi Spindle	Torque Driver Handpiece	01-01-00257-01
ng-TD-PS-24-80	Power Supply Unit	01-91-00006-01
ng-TD-Cable 3 m	Driver Cable 3 meters	01-90-00014-01
ng-TD-Cable 2 m	Driver Cable 2 meters	01-90-00011-01
ng-TDC	Torque Driver Controller Interface	01-01-00220-01
n-quirer TD	Torque Driver System Software	01-01-00215-01
USB Cable	Cable USB-A / USB Mini 1.8 m	01-90-00002-01

ng-TDH50-hu Sensor Torque Driver System

Article Number	01-01-00311-02
Torque Range	5 to 50 cNm
Torque Measurement Accuracy	1 % of the F.S.R.
Angle Measurement Resolution	0.1 Degrees
RPM Range	100 to 1,300 min^{-1}
Bit Drive	4 mm Halfmoon
Dimensions	196 x 48 x 25 mm
Weight	0.47 kg
Interface	USB

Scope of Supply

Type	Description	Article Number
ng-TDH50-hu2 Spindle	Torque Driver Handpiece	01-01-00484-01
ng-TD-PS-24-80	Power Supply Unit	01-91-00006-01
ng-TD-Cable 3 m	Driver Cable 3 meters	01-90-00014-01
USB Cable	Cable USB-A / USB Mini 1.8 m	01-90-00002-01
n-quirer TD	Torque Driver System Software	01-01-00215-01

ng-TDH50-hi Sensor Torque Driver System

Article Number	01-01-00350-02
Torque Range	5 to 50 cNm
Torque Measurement Accuracy	1 % of the F.S.R.
Angle Measurement Resolution	0.1 Degrees
RPM Range	100 to 1,300 min^{-1}
Bit Drive	4 mm Halfmoon
Dimensions	196 x 48 x 25 mm
Weight	0.47 kg
Interface	Digital to ng-TDC

Scope of Supply

Type	Description	Article Number
ng-TDH50-hi2 Spindle	Torque Driver Handpiece	01-01-00603-01
ng-TD-PS-24-80	Power Supply Unit	01-91-00006-01
ng-TD-Cable 3 m	Driver Cable 3 meters	01-90-00014-01
ng-TD-Cable 2 m	Driver Cable 2 meters	01-90-00011-01
ng-TDC	Torque Driver Controller Interface	01-01-00220-01
n-quirer TD	Torque Driver System Software	01-01-00215-01
USB Cable	Cable USB-A / USB Mini 1.8 m	01-90–00002-01

ng-TDH100-hu Sensor Torque Driver System

Article Number	01-01-00268-01
Torque Range	10 to 100 cNm
Torque Measurement Accuracy	1 % of the F.S.R.
Angle Measurement Resolution	0.1 Degrees
RPM Range	100 to 1,300 min^{-1}
Bit Drive	4 mm Halfmoon
Dimensions	222 x 60 x 36 mm
Weight	0.98 kg
Interface	USB

Scope of Supply

Type	Description	Article Number
ng-TDH100-hu Spindle	Torque Driver Handpiece	01-01-00258-01
ng-TD-PS-36-600	Power Supply Unit	01-91-00004-01
ng-TD-Cable 3 m	Driver Cable 3 meters	01-90-00014-01
USB Cable	Cable USB-A / USB Mini 1.8 m	01-90-00002-01
n-quirer TD	Torque Driver System Software	01-01-00215-01

ng-TDH100-hi Sensor Torque Driver System

Article Number	01-01-00269-01
Torque Range	10 to 100 cNm
Torque Measurement Accuracy	1 % of the F.S.R.
Angle Measurement Resolution	0.1 Degrees
RPM Range	100 to 1,300 min^{-1}
Bit Drive	4 mm Halfmoon
Dimensions	222 x 60 x 36 mm
Weight	0.98 kg
Interface	Digital to ng-TDC

Scope of Supply

Type	Description	Article Number
ng-TDH100-hi Spindle	Torque Driver Handpiece	01-01-00259-01
ng-TD-PS-36-600	Power Supply Unit	01-91-00004-01
ng-TD-Cable 3 m	Driver Cable 3 meters	01-90-00014-01
ng-TD-Cable 2 m	Driver Cable 2 meters	01-90-00011-01
ng-TDC	Torque Driver Controller Interface	01-01-00220-01
n-quirer TD7	Torque Driver System Software	01-01-00215-01
USB Cable	Cable USB-A / USB Mini 1.8 m	01-90–00002-01

4.3 Handheld Sensor Measurement Drivers ng-TDHQ

These systems are designed for precise detection of torque and angle of rotation at low speed and are therefore ideal for measurement and adjustment processes. In terms of function, they are otherwise identical to the **ng-TDH** systems.

ng-TDHQ10-hu Sensor Measurement Driver System

Article Number	01-01-00391-01
Torque Range	1 to 10 cNm
Torque Measurement Accuracy	1 % of the F.S.R.
Angle Measurement Resolution	0.1 Degrees
RPM Range	5 to 300 min^{-1}
Bit Drive	4 mm Halfmoon
Dimensions	196 x 48 x 25 mm
Weight	0.47 kg
Interface	USB

Scope of Supply

Type	Description	Article Number
ng-TDHQ10-hu Spindle	Torque Driver Handpiece	01-01-00384-01
ng-TD-PS-24-80	Power Supply Unit	01-91-00006-01
ng-TD-Cable 3 m	Driver Cable 3 meters	01-90-00014-01
USB Cable	Cable USB-A / USB Mini 1.8m	01-90-00002-01
n-quirer TD	Torque Driver System Software	01-01-00215-01

ng-TDHQ10-hi Sensor Measurement Driver System

Article Number	01-01-00390-01
Torque Range	1 to 10 cNm
Torque Measurement Accuracy	1 % of the F.S.R.
Angle Measurement Resolution	0.1 Degrees
RPM Range	5 to 300 min^{-1}
Bit Drive	4 mm Halfmoon
Dimensions	196 x 48 x 25 mm
Weight	0.47 kg
Interface	Digital to ng-TDC

Scope of Supply

Type	Description	Article Number
ng-TDHQ10-hi Spindle	Torque Driver Handpiece	01-01-00383-01
ng-TD-PS-24-80	Power Supply Unit	01-91-00006-01
ng-TD-Cable 3 m	Driver Cable 3 meters	01-90-00014-01
ng-TD-Cable 2 m	Driver Cable 2 meters	01-90-00011-01
ng-TDC	Torque Driver Controller Interface	01-01-00220-01
n-quirer TD	Torque Driver System Software	01-01-00215-01
USB Cable	Cable USB-A / USB Mini 1.8 m	01-90-00002-01

ng-TDHQ20-hu Sensor Measurement Driver System

Article Number	01-01-00290-01
Torque Range	2 to 20 cNm
Torque Measurement Accuracy	1 % of the F.S.R.
Angle Measurement Resolution	0.1 Degrees
RPM Range	5 to 300 min^{-1}
Bit Drive	4 mm Halfmoon
Dimensions	196 x 48 x 25 mm
Weight	0.47 kg
Interface	USB

Scope of Supply

Type	Description	Article Number
ng-TDHQ20-hu Spindle	Torque Driver Handpiece	01-01-00382-01
ng-TD-PS-24-80	Power Supply Unit	01-91-00006-01
ng-TD-Cable 3 m	Driver Cable 3 meters	01-90-00014-01
USB Cable	Cable USB-A / USB Mini 1.8 m	01-90-00002-01
n-quirer TD	Torque Driver System Software	01-01-00215-01

ng-TDHQ20-hi Sensor Measurement Driver System

Article Number	01-01-00389-01
Torque Range	2 to 20 cNm
Torque Measurement Accuracy	1 % of the F.S.R.
Angle Measurement Resolution	0.1 Degrees
RPM Range	5 to 300 min^{-1}
Bit Drive	4 mm Halfmoon
Dimensions	196 x 48 x 25 mm
Weight	0.47 kg
Interface	Digital to ng-TDC

Scope of Supply

Type	Description	Article Number
ng-TDHQ20-hi Spindle	Torque Driver Handpiece	01-01-00381-01
ng-TD-PS-24-80	Power Supply Unit	01-91-00006-01
ng-TD-Cable 3 m	Driver Cable 3 meters	01-90-00014-01
ng-TD-Cable 2 m	Driver Cable 2 meters	01-90-00011-01
ng-TDC	Torque Driver Controller Interface	01-01-00220-01
n-quirer TD	Torque Driver System Software	01-01-00215-01
USB Cable	Cable USB-A / USB Mini 1.8 m	01-90-00002-01

ng-TDHQ50-hu Sensor Measurement Driver System

Article Number	01-01-00373-02
Torque Range	5 to 50 cNm
Torque Measurement Accuracy	1 % of the F.S.R.
Angle Measurement Resolution	0.1 Degrees
RPM Range	5 to 300 min^{-1}
Bit Drive	4 mm Halfmoon
Dimensions	196 x 48 x 25 mm
Weight	0.47 kg
Interface	USB

Scope of Supply

Type	Description	Article Number
ng-TDHQ50-hu Spindle	Torque Driver Handpiece	01-01-00371-01
ng-TD-PS-24-80	Power Supply Unit	01-91-00006-01
ng-TD-Cable 3 m	Driver Cable 3 meters	01-90-00014-01
USB Cable	Cable USB-A / USB Mini 1.8 m	01-90-00002-01
n-quirer TD	Torque Driver System Software	01-01-00215-01

ng-TDHQ50-hi Sensor Measurement Driver System

Article Number	01-01-00372-02
Torque Range	5 to 50 cNm
Torque Measurement Accuracy	1 % of the F.S.R.
Angle Measurement Resolution	0.1 Degrees
RPM Range	5 to 300 min^{-1}
Bit Drive	4 mm Halfmoon
Dimensions	196 x 48 x 25 mm
Weight	0.47 kg
Interface	Digital to ng-TDC

Scope of Supply

Type	Description	Article Number
ng-TDHQ50-hi Spindle	Torque Driver Handpiece	01-01-00370-01
ng-TD-PS-24-80	Power Supply Unit	01-91-00006-01
ng-TD-Cable 3 m	Driver Cable 3 meters	01-90-00014-01
ng-TD-Cable 2 m	Driver Cable 2 meters	01-90-00011-01
ng-TDC	Torque Driver Controller Interface	01-01-00220-01
n-quirer TD	Torque Driver System Software	01-01-00215-01
USB Cable	Cable USB-A / USB Mini 1.8 m	01-90–00002-01

ng-TDHQ100-hu Sensor Measurement Driver System

Article Number	01-01-00282-01
Torque Range	10 to 100 cNm
Torque Measurement Accuracy	1 % of the F.S.R.
Angle Measurement Resolution	0.1 Degrees
RPM Range	5 to 300 min^{-1}
Bit Drive	4 mm Halfmoon
Dimensions	222 x 60 x 36 mm
Weight	0.98 kg
Interface	USB

Scope of Supply

Type	Description	Article Number
ng-TDHQ100-hu Spindle	Torque Driver Handpiece	01-01-00302-01
ng-TD-PS-36-600	Power Supply Unit	01-91-00004-01
ng-TD-Cable 3 m	Driver Cable 3 meters	01-90-00014-01
USB Cable	Cable USB-A / USB Mini 1.8 m	01-90-00002-01
n-quirer TD	Torque Driver System Software	01-01-00215-01

ng-TDHQ100-hi Sensor Measurement Driver System

Article Number	01-01-00388-01
Torque Range	10 to 100 cNm
Torque Measurement Accuracy	1 % of the F.S.R.
Angle Measurement Resolution	0.1 Degrees
RPM Range	5 to 300 min^{-1}
Bit Drive	4 mm Halfmoon
Dimensions	222 x 60 x 36 mm
Weight	0.98 kg
Interface	Digital to ng-TDC

Scope of Supply

Type	Description	Article Number
ng-TDHQ100-hi Spindle	Torque Driver Handpiece	01-01-00380-01
ng-TD-PS-36-600	Power Supply Unit	01-91-00004-01
ng-TD-Cable 3 m	Driver Cable 3 meters	01-90-00014-01
ng-TD-Cable 2 m	Driver Cable 2 meters	01-90-00011-01
ng-TDC	Torque Driver Controller Interface	01-01-00220-01
n-quirer TD	Torque Driver System Software	01-01-00215-01
USB Cable	Cable USB-A / USB Mini 1.8 m	01-90–00002-01

ng-TDHQ200-xu Sensor Measurement Driver System

Article Number	01-01-00294-01
Torque Range	20 to 200 cNm
Torque Measurement Accuracy	1 % of the F.S.R.
Angle Measurement Resolution	0.1 Degrees
RPM Range	5 to 300 min^{-1}
Bit Drive	¼" Hexagon
Dimensions	222 x 60 x 36 mm
Weight	0.98 kg
Interface	USB

Scope of Supply

Type	Description	Article Number
ng-TDHQ200-xu Spindle	Torque Driver Handpiece	01-01-00379-01
ng-TD-PS-36-600	Power Supply Unit	01-91-00004-01
ng-TD-Cable 3 m	Driver Cable 3 meters	01-90-00014-01
USB Cable	Cable USB-A / USB Mini 1.8 m	01-90-00002-01
n-quirer TD	Torque Driver System Software	01-01-00215-01

ng-TDHQ200-xi Sensor Measurement Driver System

Article Number	01-01-00387-01
Torque Range	20 to 200 cNm
Torque Measurement Accuracy	1 % of the F.S.R.
Angle Measurement Resolution	0.1 Degrees
RPM Range	5 to 300 min^{-1}
Bit Drive	¼" Hexagon
Dimensions	222 x 60 x 36 mm
Weight	0.98 kg
Interface	Digital to ng-TDC

Scope of Supply

Type	Description	Article Number
ng-TDHQ200-xi Spindle	Torque Driver Handpiece	01-01-00378-01
ng-TD-PS-36-600	Power Supply Unit	01-91-00004-01
ng-TD-Cable 3 m	Driver Cable 3 meters	01-90-00014-01
ng-TD-Cable 2 m	Driver Cable 2 meters	01-90-00011-01
ng-TDC	Torque Driver Controller Interface	01-01-00220-01
n-quirer TD	Torque Driver System Software	01-01-00215-01
USB Cable	Cable USB-A / USB Mini 1.8m	01-90–00002-01

ng-TDHQ400-xu Sensor Measurement Driver System

Article Number	01-01-00293-01
Torque Range	40 to 400 cNm
Torque Measurement Accuracy	1 % of the F.S.R.
Angle Measurement Resolution	0.1 Degrees
RPM Range	5 to 300 min^{-1}
Bit Drive	¼" Hexagon
Dimensions	222 x 60 x 36 mm
Weight	0.98 kg
Interface	USB

Scope of Supply

Type	Description	Article Number
ng-TDHQ400-xu Spindle	Torque Driver Handpiece	01-01-00377-01
ng-TD-PS-36-600	Power Supply Unit	01-91-00004-01
ng-TD-Cable 3 m	Driver Cable 3 meters	01-90-00014-01
USB Cable	Cable USB-A / USB Mini 1.8 m	01-90-00002-01
n-quirer TD	Torque Driver System Software	01-01-00215-01

ng-TDHQ400-xi Sensor Measurement Driver System

Article Number	01-01-00386-01
Torque Range	40 to 400 cNm
Torque Measurement Accuracy	1 % of the F.S.R.
Angle Measurement Resolution	0.1 Degrees
RPM Range	5 to 300 min^{-1}
Bit Drive	¼" Hexagon
Dimensions	222 x 60 x 36 mm
Weight	0.98 kg
Interface	Digital to ng-TDC

Scope of Supply

Type	Description	Article Number
ng-TDHQ400-xi Spindle	Torque Driver Handpiece	01-01-00376-01
ng-TD-PS-36-600	Power Supply Unit	01-91-00004-01
ng-TD-Cable 3 m	Driver Cable 3 meters	01-90-00014-01
ng-TD-Cable 2 m	Driver Cable 2 meters	01-90-00011-01
ng-TDC	Torque Driver Controller Interface	01-01-00220-01
n-quirer TD	Torque Driver System Software	01-01-00215-01
USB Cable	Cable USB-A / USB Mini 1.8m	01-90–00002-01

ng-TDHQ500-xu Sensor Measurement Driver System

Article Number	01-01-00291-01
Torque Range	50 to 500 cNm
Torque Measurement Accuracy	1 % of the F.S.R.
Angle Measurement Resolution	0.1 Degrees
RPM Range	5 to 300 min^{-1}
Bit Drive	¼" Hexagon
Dimensions	222 x 60 x 36 mm
Weight	0.98 kg
Interface	USB

Scope of Supply

Type	Description	Article Number
ng-TDHQ500-xu Spindle	Torque Driver Handpiece	01-01-00375-01
ng-TD-PS-36-600	Power Supply Unit	01-91-00004-01
ng-TD-Cable 3 m	Driver Cable 3 meters	01-90-00014-01
USB Cable	Cable USB-A / USB Mini 1.8 m	01-90-00002-01
n-quirer TD	Torque Driver System Software	01-01-00215-01

ng-TDHQ500-xi Sensor Measurement Driver System

Article Number	01-01-00385-01
Torque Range	50 to 500 cNm
Torque Measurement Accuracy	1 % of the F.S.R.
Angle Measurement Resolution	0.1 Degrees
RPM Range	5 to 300 min^{-1}
Bit Drive	¼" Hexagon
Dimensions	222 x 60 x 36 mm
Weight	0.98 kg
Interface	Digital to ng-TDC

Scope of Supply

Type	Description	Article Number
ng-TDHQ500-xi Spindle	Torque Driver Handpiece	01-01-00374-01
ng-TD-PS-36-600	Power Supply Unit	01-91-00004-01
ng-TD-Cable 3 m	Driver Cable 3 meters	01-90-00014-01
ng-TD-Cable 2 m	Driver Cable 2 meters	01-90-00011-01
ng-TDC	Torque Driver Controller Interface	01-01-00220-01
n-quirer TD	Torque Driver System Software	01-01-00215-01
USB Cable	Cable USB-A / USB Mini 1.8 m	01-90–00002-01

Dimensions and Weigth:

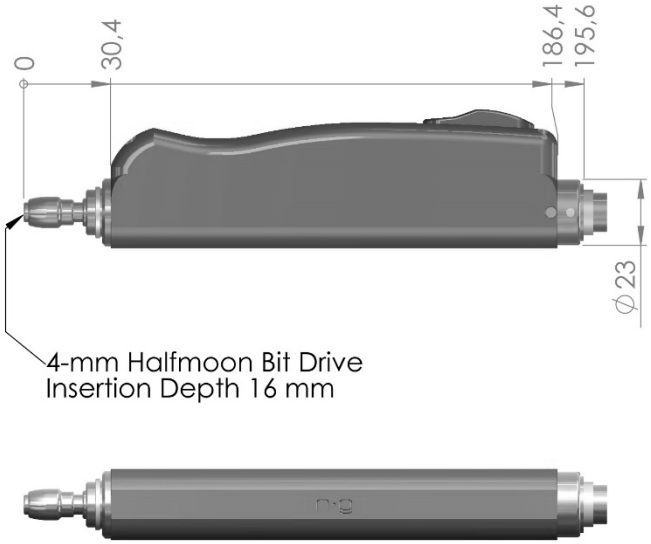

ng-TDH10-hi
ng-TDH20-hi
ng-TDH50-hi
ng-TDHQ10-hi
ng-TDHQ20-hi
ng-TDHQ50-hi

ng-TDH10-hu
ng-TDH20-hu
ng-TDH50-hu
ng-TDHQ10-hu
ng-TDHQ20-hu
ng-TDHQ50-hu

Weight: 0,47 kg

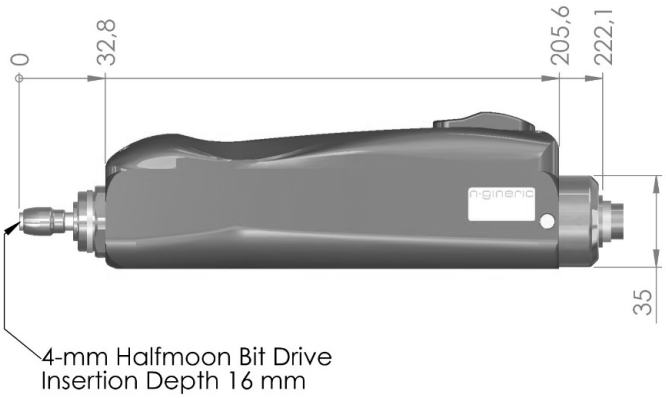

ng-TDH100-hi
ng-TDHQ100-hi

ng-TDH100-hu
ng-TDHQ100-hu

Weight: 0,98 kg

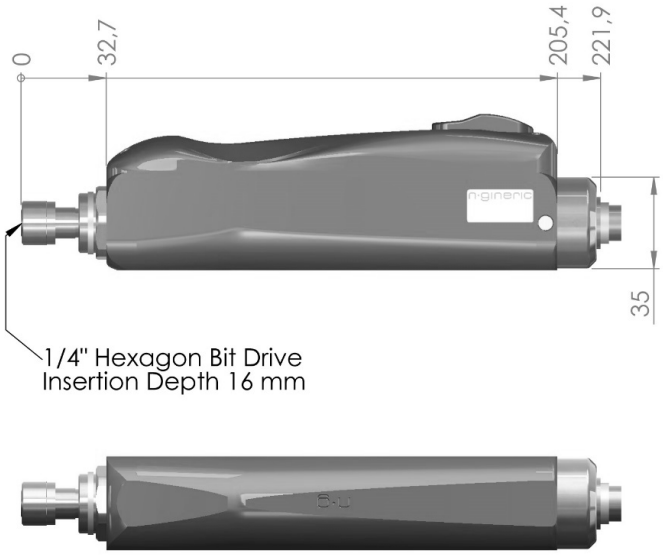

ng-TDHQ200-xi
ng-TDHQ400-xi
ng-TDHQ500-xi

ng-TDHQ200-xu
ng-TDHQ400-xu
ng-TDHQ500-xu

Weight: 0,98 kg

4.4 Handheld Sensor Torque Drivers ng-eTDH

- Torque Range:
  - 0.1 – 1.0 Nm
  - 0.2 – 2.0 Nm
  - 0.4 – 4.0 Nm
  - 0.5 – 5.0 Nm
  - 1.0 – 10.0 Nm
  - 2,0 – 20,0 Nm

- Ultimate Torque/Angle Measurement Precision:
  - Strain Gage based Rotary Torque Sensor integrated at the Bit Chuck
  - 24 bits A/D Converter Resolution of the Torque Measurement at the Rotary Part
  - Brushless Digital Signal Transmission from the Rotary to the Stationary Part
  - 0.1 Degrees Resolution of the Angle Measurement directly at the Bit Chuck

- Massive Aluminum Housing
- Ergonomic handle
- Push-to-Start
- Front-LEDs
- Brushless DC Motor Technology
- Adaptive Screw Tightening Strategies
- All Controls integrated
- Industry-4.0-compliant
- Precise in measurement and highly productive

The **adaptive screwing strategies** are used to compensate for fluctuations in the head contact torque when screwing in thread-forming screws. The aim of a clamping force that is as constant as possible is thus achieved even with critical screw connections.

Inner Structure:

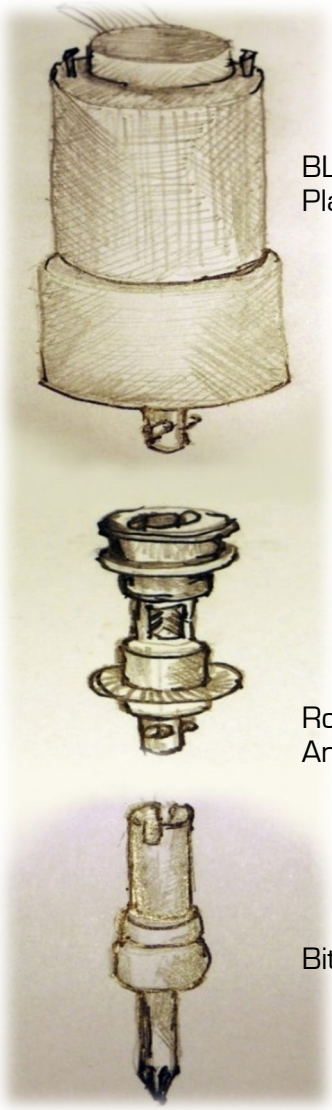

BL-DC Drive with
Planetary Gearbox

Rotary Torque/
Angle Sensor

Bit Chuck Unit

Torque Driver Nomenclature:

ng-eTDH□□□-□□

- **u** = USB direct
- **i** = with ng-TDC Interface
- **x** = Hexagon Bit Chuck
- Torque Range in cNm
- **H** = Handheld
- **eTD** = Torque Driver (Screwdriver system, Economy-Version)
- **ng** = n-gineric Product

ng-eTDH100-xu Sensor Torque Driver System

Article Number	01-01-00558-01
Torque Range	10 to 100 cNm
Torque Measurement Accuracy	2 % of the F.S.R.
Angle Measurement Resolution	0.1 Degrees
RPM Range	100 to 1,300 min^{-1}
Bit Drive	¼" Hexagon
Dimensions	∅ 42 x 279 mm
Weight	0.88 kg
Interface	USB

Scope of Supply

Type	Description	Article Number
ng-eTDH100-xu Spindle	Torque Driver Handpiece	01-01-00557-01
ng-TD-PS-36-600	Power Supply Unit	01-91-00004-01
ng-TD-Cable 3 m	Driver Cable 3 meters	01-90-00014-01
USB Cable	Cable USB-A / USB Mini 1.8m	01-90-00002-01
n-quirer TD	Torque Driver System Software	01-01-00215-01

ng-eTDH100-xi Sensor Torque Driver System

Article Number	01-01-00560-01
Torque Range	10 to 100 cNm
Torque Measurement Accuracy	2 % of the F.S.R.
Angle Measurement Resolution	0.1 Degrees
RPM Range	100 to 1,300 min^{-1}
Bit Drive	¼" Hexagon
Dimensions	∅ 42 x 279 mm
Weight	0.88 kg
Interface	Digital to ng-TDC

Scope of Supply

Type	Description	Article Number
ng-eTDH100-xi Spindle	Torque Driver Handpiece	01-01-00559-01
ng-TD-PS-36-600	Power Supply Unit	01-91-00004-01
ng-TD-Cable 3 m	Driver Cable 3 meters	01-90-00014-01
ng-TD-Cable 2 m	Driver Cable 2 meters	01-90-00011-01
ng-TDC	Torque Driver Controller Interface	01-01-00220-01
n-quirer TD	Torque Driver System Software	01-01-00215-01
USB Cable	Cable USB-A / USB Mini 1.8 m	01-90–00002-01

ng-eTDH200-xu Sensor Torque Driver System

Article Number	01-01-00562-01
Torque Range	20 to 200 cNm
Torque Measurement Accuracy	2 % of the F.S.R.
Angle Measurement Resolution	0.1 Degrees
RPM Range	100 to 1000 min^{-1}
Bit Drive	¼" Hexagon
Dimensions	∅ 42 x 279 mm
Weight	0.88 kg
Interface	USB

Scope of Supply

Type	Description	Article Number
ng-eTDH200-xu Spindle	Torque Driver Handpiece	01-01-00561-01
ng-TD-PS-36-600	Power Supply Unit	01-91-00004-01
ng-TD-Cable 3 m	Driver Cable 3 meters	01-90-00014-01
USB Cable	Cable USB-A / USB Mini 1.8 m	01-90-00002-01
n-quirer TD	Torque Driver System Software	01-01-00215-01

ng-eTDH200-xi Sensor Torque Driver System

Article Number	01-01-00564-01
Torque Range	20 to 200 cNm
Torque Measurement Accuracy	2 % of the F.S.R.
Angle Measurement Resolution	0.1 Degrees
RPM Range	100 to 1000 min^{-1}
Bit Drive	¼" Hexagon
Dimensions	∅ 42 x 279 mm
Weight	0.88 kg
Interface	Digital to ng-TDC

Scope of Supply

Type	Description	Article Number
ng-eTDH200-xi Spindle	Torque Driver Handpiece	01-01-00563-01
ng-TD-PS-36-600	Power Supply Unit	01-91-00004-01
ng-TD-Cable 3 m	Driver Cable 3 meters	01-90-00014-01
ng-TD-Cable 2 m	Driver Cable 2 meters	01-90-00011-01
ng-TDC	Torque Driver Controller Interface	01-01-00220-01
n-quirer TD	Torque Driver System Software	01-01-00215-01
USB Cable	Cable USB-A / USB Mini 1.8 m	01-90–00002-01

ng-eTDH400-xu Sensor Torque Driver System

Article Number	01-01-00566-01
Torque Range	40 to 400 cNm
Torque Measurement Accuracy	2 % of the F.S.R.
Angle Measurement Resolution	0.1 Degrees
RPM Range	100 to 800 min^{-1}
Bit Drive	¼" Hexagon
Dimensions	∅ 42 x 279 mm
Weight	0.88 kg
Interface	USB

Scope of Supply

Type	Description	Article Number
ng-eTDH400-xu Spindle	Torque Driver Handpiece	01-01-00565-01
ng-TD-PS-36-600	Power Supply Unit	01-91-00004-01
ng-TD-Cable 3 m	Driver Cable 3 meters	01-90-00014-01
USB Cable	Cable USB-A / USB Mini 1.8 m	01-90-00002-01
n-quirer TD	Torque Driver System Software	01-01-00215-01

ng-eTDH400-xi Sensor Torque Driver System

Article Number	01-01-00568-01
Torque Range	40 to 400 cNm
Torque Measurement Accuracy	2 % of the F.S.R.
Angle Measurement Resolution	0.1 Degrees
RPM Range	100 to 800 min^{-1}
Bit Drive	¼" Hexagon
Dimensions	∅ 42 x 279 mm
Weight	0.88 kg
Interface	Digital to ng-TDC

Scope of Supply

Type	Description	Article Number
ng-eTDH400-xi Spindle	Torque Driver Handpiece	01-01-00567-01
ng-TD-PS-36-600	Power Supply Unit	01-91-00004-01
ng-TD-Cable 3 m	Driver Cable 3 meters	01-90-00014-01
ng-TD-Cable 2 m	Driver Cable 2 meters	01-90-00011-01
ng-TDC	Torque Driver Controller Interface	01-01-00220-01
n-quirer TD	Torque Driver System Software	01-01-00215-01
USB Cable	Cable USB-A / USB Mini 1.8 m	01-90–00002-01

ng-eTDH500-xu Sensor Torque Driver System

Article Number	01-01-00570-01
Torque Range	50 to 500 cNm
Torque Measurement Accuracy	2 % of the F.S.R.
Angle Measurement Resolution	0.1 Degrees
RPM Range	100 to 600 min^{-1}
Bit Drive	¼" Hexagon
Dimensions	∅ 42 x 279 mm
Weight	0.88 kg
Interface	USB

Scope of Supply

Type	Description	Article Number
ng-eTDH500-xu Spindle	Torque Driver Handpiece	01-01-00569-01
ng-TD-PS-36-600	Power Supply Unit	01-91-00004-01
ng-TD-Cable 3 m	Driver Cable 3 meters	01-90-00014-01
USB Cable	Cable USB-A / USB Mini 1.8 m	01-90-00002-01
n-quirer TD	Torque Driver System Software	01-01-00215-01

ng-eTDH500-xi Sensor Torque Driver System

Article Number	01-01-00572-01
Torque Range	50 to 500 cNm
Torque Measurement Accuracy	2 % of the F.S.R.
Angle Measurement Resolution	0.1 Degrees
RPM Range	100 to 600 min^{-1}
Bit Drive	¼" Hexagon
Dimensions	∅ 42 x 279 mm
Weight	0.88 kg
Interface	Digital to ng-TDC

Scope of Supply

Type	Description	Article Number
ng-eTDH500-xi Spindle	Torque Driver Handpiece	01-01-00571-01
ng-TD-PS-36-600	Power Supply Unit	01-91-00004-01
ng-TD-Cable 3 m	Driver Cable 3 meters	01-90-00014-01
ng-TD-Cable 2 m	Driver Cable 2 meters	01-90-00011-01
ng-TDC	Torque Driver Controller Interface	01-01-00220-01
n-quirer TD	Torque Driver System Software	01-01-00215-01
USB Cable	Cable USB-A / USB Mini 1.8 m	01-90–00002-01

ng-eTDH1000-xu Sensor Torque Driver System

Article Number	01-01-00609-01
Torque Range	1.0 to 10.0 Nm
Torque Measurement Accuracy	2 % of the F.S.R.
Angle Measurement Resolution	0.1 Degrees
RPM Range	50 to 400 min^{-1}
Bit Drive	¼" Hexagon
Dimensions	∅ 47.5 x 335 mm
Weight	1.65 kg
Interface	USB

Scope of Supply

Type	Description	Artikelnummer
ng-eTDH1000-xu Spindle	Torque Driver Handpiece	01-01-00608-01
ng-TD-PS-36-600	Power Supply Unit	01-91-00004-01
ng-TD-Cable 3 m	Driver Cable 3 meters	01-90-00014-01
USB Cable	Cable USB-A / USB Mini 1.8 m	01-90-00002-01
n-quirer TD	Torque Driver System Software	01-01-00215-01

ng-eTDH1000-xi Sensor Torque Driver System

Article Number	01-01-00611-01
Torque Range	1.0 to 10.0 Nm
Torque Measurement Accuracy	2 % of the F.S.R.
Angle Measurement Resolution	0.1 Degrees
RPM Range	50 to 400 min^{-1}
Bit Drive	¼" Hexagon
Dimensions	∅ 47.5 x 335 mm
Weight	1.65 kg
Interface	Digital to ng-TDC

Scope of Supply

Type	Description	Artikelnummer
ng-eTDH1000-xi Spindle	Torque Driver Handpiece	01-01-00610-01
ng-TD-PS-36-600	Power Supply Unit	01-91-00004-01
ng-TD-Cable 3 m	Driver Cable 3 meters	01-90-00014-01
ng-TD-Cable 2 m	Driver Cable 2 meters	01-90-00011-01
ng-TDC	Torque Driver Controller Interface	01-01-00220-01
n-quirer TD	Torque Driver System Software	01-01-00215-01
USB Cable	Cable USB-A / USB Mini 1.8 m	01-90-00002-01

ng-eTDH2000-xu Sensor Torque Driver System

Article Number	01-01-00701-01
Torque Range	2.0 to 20.0 Nm
Torque Measurement Accuracy	2 % of the F.S.R.
Angle Measurement Resolution	0.1 Degrees
RPM Range	50 to 400 min^{-1}
Bit Drive	¼" Hexagon
Dimensions	∅ 47.5 x 347 mm
Weight	1.65 kg
Interface	USB

Scope of Supply

Type	Description	Artikelnummer
ng-eTDH2000-xu Spindle	Torque Driver Handpiece	01-01-00700-01
ng-TD-PS-36-600	Power Supply Unit	01-91-00004-01
ng-TD-Cable 3 m	Driver Cable 3 meters	01-90-00014-01
USB Cable	Cable USB-A / USB Mini 1.8 m	01-90-00002-01
n-quirer TD	Torque Driver System Software	01-01-00215-01

ng-eTDH2000-xi Sensor Torque Driver System

Article Number	01-01-00694-01
Torque Range	2.0 to 20.0 Nm
Torque Measurement Accuracy	2 % of the F.S.R.
Angle Measurement Resolution	0.1 Degrees
RPM Range	50 to 400 min^{-1}
Bit Drive	¼" Hexagon
Dimensions	∅ 47.5 x 347 mm
Weight	1.65 kg
Interface	Digital to ng-TDC

Scope of Supply

Type	Description	Artikelnummer
ng-eTDH2000-xi Spindle	Torque Driver Handpiece	01-01-00693-01
ng-TD-PS-36-600	Power Supply Unit	01-91-00004-01
ng-TD-Cable 3 m	Driver Cable 3 meters	01-90-00014-01
ng-TD-Cable 2 m	Driver Cable 2 meters	01-90-00011-01
ng-TDC	Torque Driver Controller Interface	01-01-00220-01
n-quirer TD	Torque Driver System Software	01-01-00215-01
USB Cable	Cable USB-A / USB Mini 1.8 m	01-90-00002-01

Dimensions and Weigth:

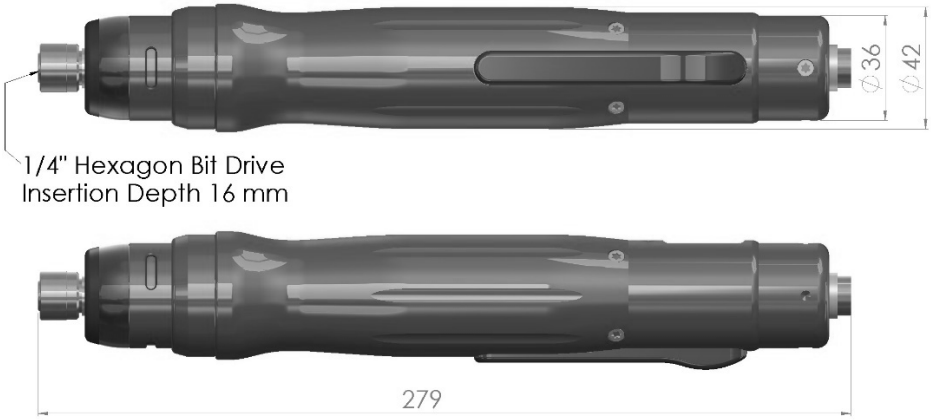

ng-eTDH100-xi
ng-eTDH200-xi
ng-eTDH400-xi
ng-eTDH500-xi

ng-eTDH100-xu
ng-eTDH200-xu
ng-eTDH400-xu
ng-eTDH500-xu

Weight: 0,88 kg

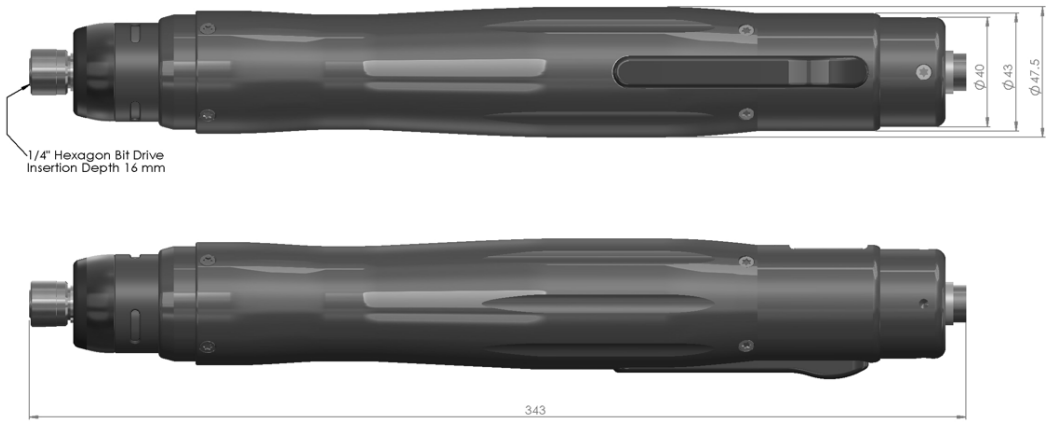

ng-eTDH1000-xi

ng-eTDH1000-xu

Weight: 1,65 kg

ng-eTDH2000-xi

ng-eTDH2000-xu

Weight: 1,65 kg

4.5 Stationary Sensor Torque Drivers ng-TDS

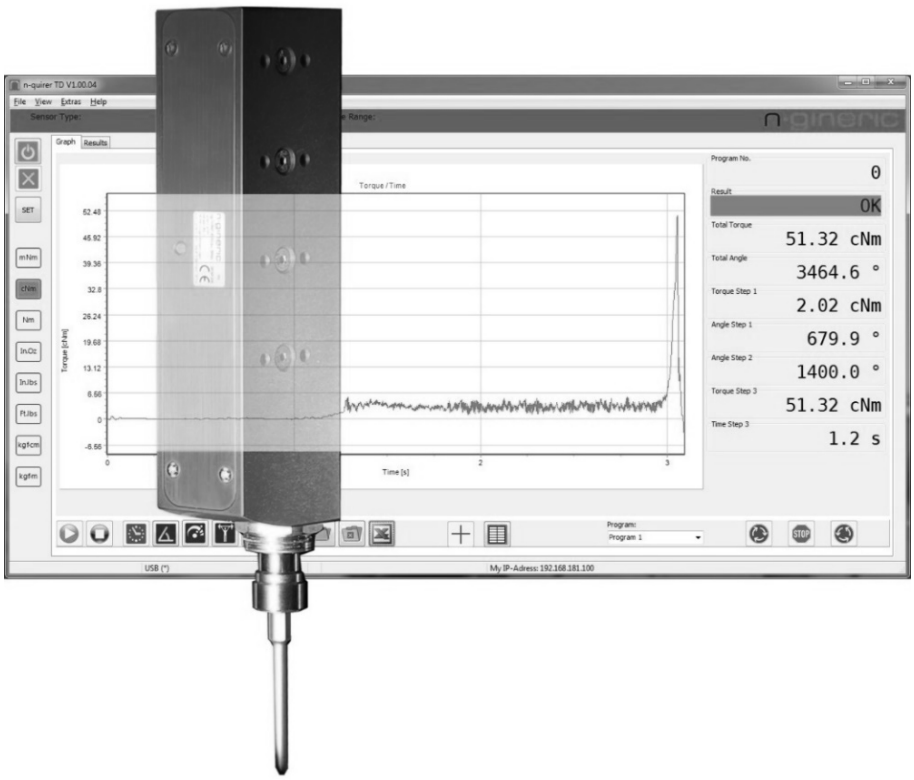

- Torque Range:
  - 0.005 – 0.05 Nm
  - 0.01 – 0.1 Nm
  - 0.02 – 0.2 Nm
  - 0.05 – 0.5 Nm
  - 0.10 – 1.0 Nm
  - 0.20 – 2.0 Nm
  - 0.40 – 4.0 Nm
  - 0.50 – 5.0 Nm
  - 0.60 – 6.0 Nm
  - 1.00 – 10.0 Nm

- Ultimate Torque/Angle Measurement Precision:
  - Strain Gage based Rotary Torque Sensor integrated at the Bit Chuck
  - 24 bits A/D Converter Resolution of the Torque Measurement at the Rotary Part
  - Brushless Digital Signal Transmission from the Rotary to the Stationary Part
  - 0.1 Degrees Resolution of the Angle Measurement directly at the Bit Chuck

- Massive Aluminum Housing
- Brushless DC Motor Technology
- Adaptive Screw Tightening Strategies
- All Controls integrated
- Industry-4.0-compliant
- Precise in measurement and highly productive

The **Adaptive Screw Tightening Strategy** provides the detection of the snug torque during the rundown of the screw. Depending on the snug torque, an additional constant or proportionate amount of torque can be applied to the screw joint to achieve repeatable clamping force.

Inner Structure:

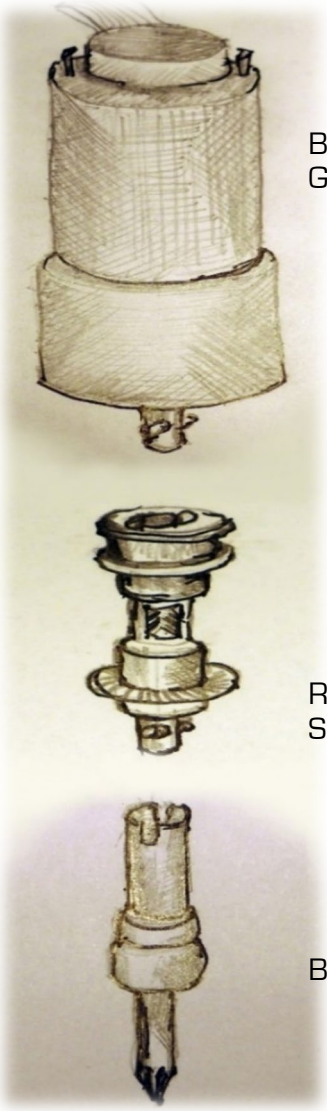

BL-DC Drive with Planetary Gearbox

Rotary Torque/Angle Sensor

Bit Chuck Unit

Torque Driver Nomenclature:

ng- TDS□□□-□□

- **u** = USB direct
- **i** = with ng-TDC Interface
- **h** = Halfmoon Bit Chuck
- **x** = Hexagon Bit Chuck
- Torque Range in cNm
- **S** = Stationary
- **TD** = Torque Driver
- **ng** = n-gineric Product

ng-TDS05-hu Sensor Torque Driver System

Article Number	01-01-00659-01
Torque Range	0.5 to 5 cNm
Torque Measurement Accuracy	1 % of the F.S.R.
Angle Measurement Resolution	0.1 Degrees
RPM Range	100 to 1,000 min^{-1}
Bit Drive	4 mm Halfmoon
Dimensions	181 x 48 x 24 mm
Weight	0.47 kg
Interface	USB

Scope of Supply

Type	Description	Article Number
ng-TDS05-hu Spindle	Torque Driver Spindle	01-01-00658-01
ng-TD-PS-24-80	Power Supply Unit	01-91-00006-01
ng-TD-Cable 3 m	Driver Cable 3 meters	01-90-00014-01
USB Cable	Cable USB-A / USB Mini 1.8m	01-90-00002-01
n-quirer TD	Torque Driver System Software	01-01-00215-01

ng-TDS05-hi Sensor Torque Driver System

Article Number	01-01-00490-01
Torque Range	0.5 to 5 cNm
Torque Measurement Accuracy	1 % of the F.S.R.
Angle Measurement Resolution	0.1 Degrees
RPM Range	100 to 1,000 min^{-1}
Bit Drive	4 mm Halfmoon
Dimensions	181 x 48 x 24 mm
Weight	0.47 kg
Interface	Digital to ng-TDC

Scope of Supply

Type	Description	Article Number
ng-TDS05-hi Spindle	Torque Driver Spindle	01-01-00491-01
ng-TD-PS-24-80	Power Supply Unit	01-91-00006-01
ng-TD-Cable 3 m	Driver Cable 3 meters	01-90-00014-01
ng-TD-Cable 2 m	Driver Cable 2 meters	01-90-00011-01
ng-TDC	Torque Driver Controller Interface	01-01-00220-01
n-quirer TD	Torque Driver System Software	01-01-00215-01
USB Cable	Cable USB-A / USB Mini 1.8 m	01-90-00002-01

ng-TDS10-hu Sensor Torque Driver System

Article Number	01-01-00241-01
Torque Range	1 to 10 cNm
Torque Measurement Accuracy	1 % of the F.S.R.
Angle Measurement Resolution	0.1 Degrees
RPM Range	100 to 1,000 min^{-1}
Bit Drive	4 mm Halfmoon
Dimensions	181 x 48 x 24 mm
Weight	0.47 kg
Interface	USB

Scope of Supply

Type	Description	Article Number
ng-TDS10-hu Spindle	Torque Driver Spindle	01-01-00232-01
ng-TD-PS-24-80	Power Supply Unit	01-91-00006-01
ng-TD-Cable 3 m	Driver Cable 3 meters	01-90-00014-01
USB Cable	Cable USB-A / USB Mini 1.8m	01-90-00002-01
n-quirer TD	Torque Driver System Software	01-01-00215-01

ng-TDS10-hi Sensor Torque Driver System

Article Number	01-01-00243-01
Torque Range	1 to 10 cNm
Torque Measurement Accuracy	1 % of the F.S.R.
Angle Measurement Resolution	0.1 Degrees
RPM Range	100 to 1,000 min^{-1}
Bit Drive	4 mm Halfmoon
Dimensions	181 x 48 x 24 mm
Weight	0.47 kg
Interface	Digital to ng-TDC

Scope of Supply

Type	Description	Article Number
ng-TDS10-hi Spindle	Torque Driver Spindle	01-01-00230-01
ng-TD-PS-24-80	Power Supply Unit	01-91-00006-01
ng-TD-Cable 3 m	Driver Cable 3 meters	01-90-00014-01
ng-TD-Cable 2 m	Driver Cable 2 meters	01-90-00011-01
ng-TDC	Torque Driver Controller Interface	01-01-00220-01
n-quirer TD	Torque Driver System Software	01-01-00215-01
USB Cable	Cable USB-A / USB Mini 1.8 m	01-90-00002-01

ng-TDS20-hu Sensor Torque Driver System

Article Number	01-01-00233-01
Torque Range	2 to 20 cNm
Torque Measurement Accuracy	1 % of the F.S.R.
Angle Measurement Resolution	0.1 Degrees
RPM Range	100 to 1,000 min^{-1}
Bit Drive	4 mm Halfmoon
Dimensions	181 x 48 x 24 mm
Weight	0.47 kg
Interface	USB

Scope of Supply

Type	Description	Article Number
ng-TDS20-hu Spindle	Torque Driver Spindle	01-01-00218-01
ng-TD-PS-24-80	Power Supply Unit	01-91-00006-01
ng-TD-Cable 3 m	Driver Cable 3 meters	01-90-00014-01
USB Cable	Cable USB-A / USB Mini 1.8 m	01-90-00002-01
n-quirer TD	Torque Driver System Software	01-01-00215-01

ng-TDS20-hi Sensor Torque Driver System

Article Number	01-01-00239-01
Torque Range	2 to 20 cNm
Torque Measurement Accuracy	1 % of the F.S.R.
Angle Measurement Resolution	0.1 Degrees
RPM Range	100 to 1,000 min^{-1}
Bit Drive	4 mm Halfmoon
Dimensions	181 x 48 x 24 mm
Weight	0.47 kg
Interface	Digital to ng-TDC

Scope of Supply

Type	Description	Article Number
ng-TDS20-hi Spindle	Torque Driver Spindle	01-01-00219-01
ng-TD-PS-24-80	Power Supply Unit	01-91-00006-01
ng-TD-Cable 3 m	Driver Cable 3 meters	01-90-00014-01
ng-TD-Cable 2 m	Driver Cable 2 meters	01-90-00011-01
ng-TDC	Torque Driver Controller Interface	01-01-00220-01
n-quirer TD	Torque Driver System Software	01-01-00215-01
USB Cable	Cable USB-A / USB Mini 1.8 m	01-90-00002-01

ng-TDS50-hu Sensor Torque Driver System

Article Number	01-01-00352-02
Torque Range	5 to 50 cNm
Torque Measurement Accuracy	1 % of the F.S.R.
Angle Measurement Resolution	0.1 Degrees
RPM Range	100 to 1,000 min^{-1}
Bit Drive	4 mm Halfmoon
Dimensions	181 x 48 x 24 mm
Weight	0.47 kg
Interface	USB

Scope of Supply

Type	Description	Article Number
ng-TDS50-hu Spindle	Torque Driver Spindle	01-01-00351-02
ng-TD-PS-24-80	Power Supply Unit	01-91-00006-01
ng-TD-Cable 3 m	Driver Cable 3 meters	01-90-00014-01
USB Cable	Cable USB-A / USB Mini 1.8m	01-90-00002-01
n-quirer TD	Torque Driver System Software	01-01-00215-01

ng-TDS50-hi Sensor Torque Driver System

Article Number	01-01-00297-02
Torque Range	5 to 50 cNm
Torque Measurement Accuracy	1 % of the F.S.R.
Angle Measurement Resolution	0.1 Degrees
RPM Range	100 to 1,000 min^{-1}
Bit Drive	4 mm Halfmoon
Dimensions	181 x 48 x 24 mm
Weight	0.47 kg
Interface	Digital to ng-TDC

Scope of Supply

Type	Description	Article Number
ng-TDS50-hi Spindle	Torque Driver Spindle	01-01-00298-02
ng-TD-PS-24-80	Power Supply Unit	01-91-00006-01
ng-TD-Cable 3 m	Driver Cable 3 meters	01-90-00014-01
ng-TD-Cable 2 m	Driver Cable 2 meters	01-90-00011-01
ng-TDC	Torque Driver Controller Interface	01-01-00220-01
n-quirer TD	Torque Driver System Software	01-01-00215-01
USB Cable	Cable USB-A / USB Mini 1.8 m	01-90–00002-01

ng-TDS100-hu Sensor Torque Driver System

Article Number	01-01-00231-01
Torque Range	10 to 100 cNm
Torque Measurement Accuracy	1 % of the F.S.R.
Angle Measurement Resolution	0.1 Degrees
RPM Range	100 to 1,300 min^{-1}
Bit Drive	4 mm Halfmoon
Dimensions	212 x 58 x 35 mm
Weight	0.98 kg
Interface	USB

Scope of Supply

Type	Description	Article Number
ng-TDS100-hu Spindle	Torque Driver Spindle	01-01-00223-01
ng-TD-PS-36-600	Power Supply Unit	01-91-00004-01
ng-TD-Cable 3 m	Driver Cable 3 meters	01-90-00014-01
USB Cable	Cable USB-A / USB Mini 1.8m	01-90-00002-01
n-quirer TD	Torque Driver System Software	01-01-00215-01

ng-TDS100-hi Sensor Torque Driver System

Article Number	01-01-00237-01
Torque Range	10 to 100 cNm
Torque Measurement Accuracy	1 % of the F.S.R.
Angle Measurement Resolution	0.1 Degrees
RPM Range	100 to 1,300 min^{-1}
Bit Drive	4 mm Halfmoon
Dimensions	212 x 58 x 35 mm
Weight	0.98 kg
Interface	Digital to ng-TDC

Scope of Supply

Type	Description	Article Number
ng-TDS100-hi Spindle	Torque Driver Spindle	01-01-00217-01
ng-TD-PS-36-600	Power Supply Unit	01-91-00004-01
ng-TD-Cable 3 m	Driver Cable 3 meters	01-90-00014-01
ng-TD-Cable 2 m	Driver Cable 2 meters	01-90-00011-01
ng-TDC	Torque Driver Controller Interface	01-01-00220-01
n-quirer TD	Torque Driver System Software	01-01-00215-01
USB Cable	Cable USB-A / USB Mini 1.8 m	01-90–00002-01

ng-TDS200-xu Sensor Torque Driver System

Article Number	01-01-00279-01
Torque Range	20 to 200 cNm
Torque Measurement Accuracy	1 % of the F.S.R.
Angle Measurement Resolution	0.1 Degrees
RPM Range	100 to 1000 min^{-1}
Bit Drive	¼" Hexagon
Dimensions	212 x 58 x 35 mm
Weight	0.98 kg
Interface	USB

Scope of Supply

Type	Description	Article Number
ng-TDS200-xu Spindle	Torque Driver Spindle	01-01-00285-01
ng-TD-PS-36-600	Power Supply Unit	01-91-00004-01
ng-TD-Cable 3 m	Driver Cable 3 meters	01-90-00014-01
USB Cable	Cable USB-A / USB Mini 1.8 m	01-90-00002-01
n-quirer TD	Torque Driver System Software	01-01-00215-01

ng-TDS200-xi Sensor Torque Driver System

Article Number	01-01-00280-01
Torque Range	20 to 200 cNm
Torque Measurement Accuracy	1 % of the F.S.R.
Angle Measurement Resolution	0.1 Degrees
RPM Range	100 to 1000 min^{-1}
Bit Drive	¼" Hexagon
Dimensions	212 x 58 x 35 mm
Weight	0.98 kg
Interface	Digital to ng-TDC

Scope of Supply

Type	Description	Article Number
ng-TDS200-xi Spindle	Torque Driver Spindle	01-01-00286-01
ng-TD-PS-36-600	Power Supply Unit	01-91-00004-01
ng-TD-Cable 3 m	Driver Cable 3 meters	01-90-00014-01
ng-TD-Cable 2 m	Driver Cable 2 meters	01-90-00011-01
ng-TDC	Torque Driver Controller Interface	01-01-00220-01
n-quirer TD	Torque Driver System Software	01-01-00215-01
USB Cable	Cable USB-A / USB Mini 1.8 m	01-90-00002-01

ng-TDS400-xu Sensor Torque Driver System

Article Number	01-01-00235-01
Torque Range	40 to 400 cNm
Torque Measurement Accuracy	1 % of the F.S.R.
Angle Measurement Resolution	0.1 Degrees
RPM Range	100 to 800 min^{-1}
Bit Drive	¼" Hexagon
Dimensions	212 x 58 x 35 mm
Weight	0.98 kg
Interface	USB

Scope of Supply

Type	Description	Article Number
ng-TDS400-xu Spindle	Torque Driver Spindle	01-01-00164-01
ng-TD-PS-36-600	Power Supply Unit	01-91-00004-01
ng-TD-Cable 3 m	Driver Cable 3 meters	01-90-00014-01
USB Cable	Cable USB-A / USB Mini 1.8 m	01-90-00002-01
n-quirer TD	Torque Driver System Software	01-01-00215-01

ng-TDS400-xi Sensor Torque Driver System

Article Number	01-01-00238-01
Torque Range	40 to 400 cNm
Torque Measurement Accuracy	1 % of the F.S.R.
Angle Measurement Resolution	0.1 Degrees
RPM Range	100 to 800 min^{-1}
Bit Drive	¼" Hexagon
Dimensions	212 x 58 x 35 mm
Weight	0.98 kg
Interface	Digital to ng-TDC

Scope of Supply

Type	Description	Article Number
ng-TDS400-xi Spindle	Torque Driver Spindle	01-01-00216-01
ng-TD-PS-36-600	Power Supply Unit	01-91-00004-01
ng-TD-Cable 3 m	Driver Cable 3 meters	01-90-00014-01
ng-TD-Cable 2 m	Driver Cable 2 meters	01-90-00011-01
ng-TDC	Torque Driver Controller Interface	01-01-00220-01
n-quirer TD	Torque Driver System Software	01-01-00215-01
USB Cable	Cable USB-A / USB Mini 1.8 m	01-90--00002-01

ng-TDS500-xu Sensor Torque Driver System

Article Number	01-01-00274-01
Torque Range	50 to 500 cNm
Torque Measurement Accuracy	1 % of the F.S.R.
Angle Measurement Resolution	0.1 Degrees
RPM Range	100 to 600 min^{-1}
Bit Drive	¼" Hexagon
Dimensions	212 x 58 x 35 mm
Weight	0.98 kg
Interface	USB

Scope of Supply

Type	Description	Article Number
ng-TDS500-xu Spindle	Torque Driver Spindle	01-01-00276-01
ng-TD-PS-36-600	Power Supply Unit	01-91-00004-01
ng-TD-Cable 3 m	Driver Cable 3 meters	01-90-00014-01
USB Cable	Cable USB-A / USB Mini 1.8 m	01-90-00002-01
n-quirer TD	Torque Driver System Software	01-01-00215-01

ng-TDS500-xi Sensor Torque Driver System

Article Number	01-01-00275-01
Torque Range	50 to 500 cNm
Torque Measurement Accuracy	1 % of the F.S.R.
Angle Measurement Resolution	0.1 Degrees
RPM Range	100 to 600 min^{-1}
Bit Drive	¼" Hexagon
Dimensions	212 x 58 x 35 mm
Weight	0.98 kg
Interface	Digital to ng-TDC

Scope of Supply

Type	Description	Article Number
ng-TDS500-xi Spindle	Torque Driver Spindle	01-01-00277-01
ng-TD-PS-36-600	Power Supply Unit	01-91-00004-01
ng-TD-Cable 3 m	Driver Cable 3 meters	01-90-00014-01
ng-TD-Cable 2 m	Driver Cable 2 meters	01-90-00011-01
ng-TDC	Torque Driver Controller Interface	01-01-00220-01
n-quirer TD	Torque Driver System Software	01-01-00215-01
USB Cable	Cable USB-A / USB Mini 1.8 m	01-90--00002-01

ng-TDS600-xi Sensor Torque Driver System

Article Number	01-01-00430-01
Torque Range	60 to 600 cNm
Torque Measurement Accuracy	1 % of the F.S.R.
Angle Measurement Resolution	0.1 Degrees
RPM Range	50 - 500 min^{-1}
Bit Drive	¼" Hexagon
Dimensions	231 x 58 x 36 mm
Weight	1.15 kg
Interface	Digital to ng-TDC

Scope of Supply

Type	Description	Article Number
ng-TDS600-xi Spindle	Torque Driver Spindle	01-01-00431-01
ng-TD-PS-36-600	Power Supply Unit	01-91-00004-01
ng-TD-Cable 3 m	Driver Cable 3 meters	01-90-00014-01
ng-TD-Cable 2 m	Driver Cable 2 meters	01-90-00011-01
ng-TDC	Torque Driver Controller Interface	01-01-00220-01
n-quirer TD	Torque Driver System Software	01-01-00215-01
USB Cable	Cable USB-A / USB Mini 1.8 m	01-90--00002-01

ng-TDS1000-xi Sensor Torque Driver System

Article Number	01-01-00410-01
Torque Range	100 to 1,000 cNm
Torque Measurement Accuracy	1 % of the F.S.R.
Angle Measurement Resolution	0.1 Degrees
RPM Range	50 - 400 min^{-1}
Bit Drive	¼" Hexagon
Dimensions	253 x 64 x 42 mm
Weight	1.75 kg
Interface	Digital to ng-TDC

Scope of Supply

Type	Description	Article Number
ng-TDS1000-xi Spindle	Torque Driver Spindle	01-01-00409-01
ng-TD-PS-36-600	Power Supply Unit	01-91-00004-01
ng-TD-Cable 3 m	Driver Cable 3 meters	01-90-00014-01
ng-TD-Cable 2 m	Driver Cable 2 meters	01-90-00011-01
ng-TDC	Torque Driver Controller Interface	01-01-00220-01
n-quirer TD	Torque Driver System Software	01-01-00215-01
USB Cable	Cable USB-A / USB Mini 1.8 m	01-90--00002-01

4.6 Stationary Sensor Measurement Drivers ng-TDSQ

These systems are designed for precise detection of torque and angle of rotation at low speed and are therefore ideal for measurement and adjustment processes. They are otherwise functionally identical to the **ng-TDS** systems.

ng-TDSQ10-hu Sensor Measurement Driver System

Article Number	01-01-00244-01
Torque Range	1 to 10 cNm
Torque Measurement Accuracy	1 % of the F.S.R.
Angle Measurement Resolution	0.1 Degrees
RPM Range	5 to 300 min^{-1}
Bit Drive	4 mm Halfmoon
Dimensions	181 x 48 x 24 mm
Weight	0.47 kg
Interface	USB

Scope of Supply

Type	Description	Article Number
ng-TDSQ10-hu Spindle	Torque Driver Spindle	01-01-00364-01
ng-TD-PS-24-80	Power Supply Unit	01-91-00006-01
ng-TD-Cable 3 m	Driver Cable 3 meters	01-90-00014-01
USB Cable	Cable USB-A / USB Mini 1.8m	01-90-00002-01
n-quirer TD	Torque Driver System Software	01-01-00215-01

ng-TDSQ10-hi Sensor Measurement Driver System

Article Number	01-01-00245-01
Torque Range	1 to 10 cNm
Torque Measurement Accuracy	1 % of the F.S.R.
Angle Measurement Resolution	0.1 Degrees
RPM Range	5 to 300 min^{-1}
Bit Drive	4 mm Halfmoon
Dimensions	181 x 48 x 24 mm
Weight	0.47 kg
Interface	Digital to ng-TDC

Scope of Supply

Type	Description	Article Number
ng-TDSQ10-hi Spindle	Torque Driver Spindle	01-01-00363-01
ng-TD-PS-24-80	Power Supply Unit	01-91-00006-01
ng-TD-Cable 3 m	Driver Cable 3 meters	01-90-00014-01
ng-TD-Cable 2 m	Driver Cable 2 meters	01-90-00011-01
ng-TDC	Torque Driver Controller Interface	01-01-00220-01
n-quirer TD	Torque Driver System Software	01-01-00215-01
USB Cable	Cable USB-A / USB Mini 1.8 m	01-90-00002-01

ng-TDSQ20-hu Sensor Measurement Driver System

Article Number	01-01-00229-01
Torque Range	2 to 20 cNm
Torque Measurement Accuracy	1 % of the F.S.R.
Angle Measurement Resolution	0.1 Degrees
RPM Range	5 to 300 min^{-1}
Bit Drive	4 mm Halfmoon
Dimensions	181 x 48 x 24 mm
Weight	0.47 kg
Interface	USB

Scope of Supply

Type	Description	Article Number
ng-TDSQ20-hu Spindle	Torque Driver Spindle	01-01-00362-01
ng-TD-PS-24-80	Power Supply Unit	01-91-00006-01
ng-TD-Cable 3 m	Driver Cable 3 meters	01-90-00014-01
USB Cable	Cable USB-A / USB Mini 1.8 m	01-90-00002-01
n-quirer TD	Torque Driver System Software	01-01-00215-01

ng-TDSQ20-hi Sensor Measurement Driver System

Article Number	01-01-00246-01
Torque Range	2 to 20 cNm
Torque Measurement Accuracy	1 % of the F.S.R.
Angle Measurement Resolution	0.1 Degrees
RPM Range	5 to 300 min^{-1}
Bit Drive	4 mm Halfmoon
Dimensions	181 x 48 x 24 mm
Weight	0.47 kg
Interface	Digital to ng-TDC

Scope of Supply

Type	Description	Article Number
ng-TDSQ20-hi Spindle	Torque Driver Spindle	01-01-00361-01
ng-TD-PS-24-80	Power Supply Unit	01-91-00006-01
ng-TD-Cable 3 m	Driver Cable 3 meters	01-90-00014-01
ng-TD-Cable 2 m	Driver Cable 2 meters	01-90-00011-01
ng-TDC	Torque Driver Controller Interface	01-01-00220-01
n-quirer TD	Torque Driver System Software	01-01-00215-01
USB Cable	Cable USB-A / USB Mini 1.8 m	01-90-00002-01

ng-TDSQ50-hu Sensor Measurement Driver System

Article Number	01-01-00365-01
Torque Range	5 to 50 cNm
Torque Measurement Accuracy	1 % of the F.S.R.
Angle Measurement Resolution	0.1 Degrees
RPM Range	5 to 300 min^{-1}
Bit Drive	4 mm Halfmoon
Dimensions	212 x 58 x 35 mm
Weight	0.98 kg
Interface	USB

Scope of Supply

Type	Description	Article Number
ng-TDSQ50-hu Spindle	Torque Driver Spindle	01-01-00353-01
ng-TD-PS-36-600	Power Supply Unit	01-91-00004-01
ng-TD-Cable 3 m	Driver Cable 3 meters	01-90-00014-01
USB Cable	Cable USB-A / USB Mini 1.8 m	01-90-00002-01
n-quirer TD	Torque Driver System Software	01-01-00215-01

ng-TDSQ50-hi Sensor Measurement Driver System

Article Number	01-01-00307-01
Torque Range	5 to 50 cNm
Torque Measurement Accuracy	1 % of the F.S.R.
Angle Measurement Resolution	0.1 Degrees
RPM Range	5 to 300 min^{-1}
Bit Drive	4 mm Halfmoon
Dimensions	212 x 58 x 35 mm
Weight	0.98 kg
Interface	Digital to ng-TDC

Scope of Supply

Type	Description	Article Number
ng-TDSQ50-hi Spindle	Torque Driver Spindle	01-01-00306-01
ng-TD-PS-36-600	Power Supply Unit	01-91-00004-01
ng-TD-Cable 3 m	Driver Cable 3 meters	01-90-00014-01
ng-TD-Cable 2 m	Driver Cable 2 meters	01-90-00011-01
ng-TDC	Torque Driver Controller Interface	01-01-00220-01
n-quirer TD	Torque Driver System Software	01-01-00215-01
USB Cable	Cable USB-A / USB Mini 1.8 m	01-90–00002-01

ng-TDSQ100-hu Sensor Measurement Driver System

Article Number	01-01-00227-01
Torque Range	10 to 100 cNm
Torque Measurement Accuracy	1 % of the F.S.R.
Angle Measurement Resolution	0.1 Degrees
RPM Range	5 to 300 min^{-1}
Bit Drive	4 mm Halfmoon
Dimensions	212 x 58 x 35 mm
Weight	0.98 kg
Interface	USB

Scope of Supply

Type	Description	Article Number
ng-TDSQ100-hu Spindle	Torque Driver Spindle	01-01-00360-01
ng-TD-PS-36-600	Power Supply Unit	01-91-00004-01
ng-TD-Cable 3 m	Driver Cable 3 meters	01-90-00014-01
USB Cable	Cable USB-A / USB Mini 1.8 m	01-90-00002-01
n-quirer TD	Torque Driver System Software	01-01-00215-01

ng-TDSQ100-hi Sensor Measurement Driver System

Article Number	01-01-00247-01
Torque Range	10 to 100 cNm
Torque Measurement Accuracy	1 % of the F.S.R.
Angle Measurement Resolution	0.1 Degrees
RPM Range	5 to 300 min^{-1}
Bit Drive	4 mm Halfmoon
Dimensions	212 x 58 x 35 mm
Weight	0.98 kg
Interface	Digital to ng-TDC

Scope of Supply

Type	Description	Article Number
ng-TDSQ100-hi Spindle	Torque Driver Spindle	01-01-00251-01
ng-TD-PS-36-600	Power Supply Unit	01-91-00004-01
ng-TD-Cable 3 m	Driver Cable 3 meters	01-90-00014-01
ng-TD-Cable 2 m	Driver Cable 2 meters	01-90-00011-01
ng-TDC	Torque Driver Controller Interface	01-01-00220-01
n-quirer TD	Torque Driver System Software	01-01-00215-01
USB Cable	Cable USB-A / USB Mini 1.8 m	01-90–00002-01

ng-TDSQ200-xu Sensor Measurement Driver System

Article Number	01-01-00369-01
Torque Range	20 to 200 cNm
Torque Measurement Accuracy	1 % of the F.S.R.
Angle Measurement Resolution	0.1 Degrees
RPM Range	5 to 300 min^{-1}
Bit Drive	¼" Hexagon
Dimensions	212 x 58 x 35 mm
Weight	0.98 kg
Interface	USB

Scope of Supply

Type	Description	Article Number
ng-TDSQ200-xu Spindle	Torque Driver Spindle	01-01-00359-01
ng-TD-PS-36-600	Power Supply Unit	01-91-00004-01
ng-TD-Cable 3 m	Driver Cable 3 meters	01-90-00014-01
USB Cable	Cable USB-A / USB Mini 1.8 m	01-90-00002-01
n-quirer TD	Torque Driver System Software	01-01-00215-01

ng-TDSQ200-xi Sensor Measurement Driver System

Article Number	01-01-00368-01
Torque Range	20 to 200 cNm
Torque Measurement Accuracy	1 % of the F.S.R.
Angle Measurement Resolution	0.1 Degrees
RPM Range	5 to 300 min^{-1}
Bit Drive	¼" Hexagon
Dimensions	212 x 58 x 35 mm
Weight	0.98 kg
Interface	Digital to ng-TDC

Scope of Supply

Type	Description	Article Number
ng-TDSQ200-xi Spindle	Torque Driver Spindle	01-01-00358-01
ng-TD-PS-36-600	Power Supply Unit	01-91-00004-01
ng-TD-Cable 3 m	Driver Cable 3 meters	01-90-00014-01
ng-TD-Cable 2 m	Driver Cable 2 meters	01-90-00011-01
ng-TDC	Torque Driver Controller Interface	01-01-00220-01
n-quirer TD	Torque Driver System Software	01-01-00215-01
USB Cable	Cable USB-A / USB Mini 1.8m	01-90–00002-01

ng-TDSQ400-xu Sensor Measurement Driver System

Article Number	01-01-00228-01
Torque Range	40 to 400 cNm
Torque Measurement Accuracy	1 % of the F.S.R.
Angle Measurement Resolution	0.1 Degrees
RPM Range	5 to 300 min^{-1}
Bit Drive	¼" Hexagon
Dimensions	212 x 58 x 35 mm
Weight	0.98 kg
Interface	USB

Scope of Supply

Type	Description	Article Number
ng-TDSQ400-xu Spindle	Torque Driver Spindle	01-01-00357-01
ng-TD-PS-36-600	Power Supply Unit	01-91-00004-01
ng-TD-Cable 3 m	Driver Cable 3 meters	01-90-00014-01
USB Cable	Cable USB-A / USB Mini 1.8 m	01-90-00002-01
n-quirer TD	Torque Driver System Software	01-01-00215-01

ng-TDSQ400-xi Sensor Measurement Driver System

Article Number	01-01-00248-01
Torque Range	40 to 400 cNm
Torque Measurement Accuracy	1 % of the F.S.R.
Angle Measurement Resolution	0.1 Degrees
RPM Range	5 to 300 min^{-1}
Bit Drive	¼" Hexagon
Dimensions	212 x 58 x 35 mm
Weight	0.98 kg
Interface	Digital to ng-TDC

Scope of Supply

Type	Description	Article Number
ng-TDSQ400-xi Spindle	Torque Driver Spindle	01-01-00356-01
ng-TD-PS-36-600	Power Supply Unit	01-91-00004-01
ng-TD-Cable 3 m	Driver Cable 3 meters	01-90-00014-01
ng-TD-Cable 2 m	Driver Cable 2 meters	01-90-00011-01
ng-TDC	Torque Driver Controller Interface	01-01-00220-01
n-quirer TD	Torque Driver System Software	01-01-00215-01
USB Cable	Cable USB-A / USB Mini 1.8m	01-90–00002-01

ng-TDSQ500-xu Sensor Measurement Driver System

Article Number	01-01-00367-01
Torque Range	50 to 500 cNm
Torque Measurement Accuracy	1 % of the F.S.R.
Angle Measurement Resolution	0.1 Degrees
RPM Range	5 to 300 min^{-1}
Bit Drive	¼" Hexagon
Dimensions	212 x 58 x 35 mm
Weight	0.98 kg
Interface	USB

Scope of Supply

Type	Description	Article Number
ng-TDSQ500-xu Spindle	Torque Driver Spindle	01-01-00355-01
ng-TD-PS-36-600	Power Supply Unit	01-91-00004-01
ng-TD-Cable 3 m	Driver Cable 3 meters	01-90-00014-01
USB Cable	Cable USB-A / USB Mini 1.8 m	01-90-00002-01
n-quirer TD	Torque Driver System Software	01-01-00215-01

ng-TDSQ500-xi Sensor Measurement Driver System

Article Number	01-01-00366-01
Torque Range	50 to 500 cNm
Torque Measurement Accuracy	1 % of the F.S.R.
Angle Measurement Resolution	0.1 Degrees
RPM Range	5 to 300 min^{-1}
Bit Drive	¼" Hexagon
Dimensions	212 x 58 x 35 mm
Weight	0.98 kg
Interface	Digital to ng-TDC

Scope of Supply

Type	Description	Article Number
ng-TDSQ500-xi Spindle	Torque Driver Spindle	01-01-00354-01
ng-TD-PS-36-600	Power Supply Unit	01-91-00004-01
ng-TD-Cable 3 m	Driver Cable 3 meters	01-90-00014-01
ng-TD-Cable 2 m	Driver Cable 2 meters	01-90-00011-01
ng-TDC	Torque Driver Controller Interface	01-01-00220-01
n-quirer TD	Torque Driver System Software	01-01-00215-01
USB Cable	Cable USB-A / USB Mini 1.8 m	01-90–00002-01

Dimensions and Weigth:

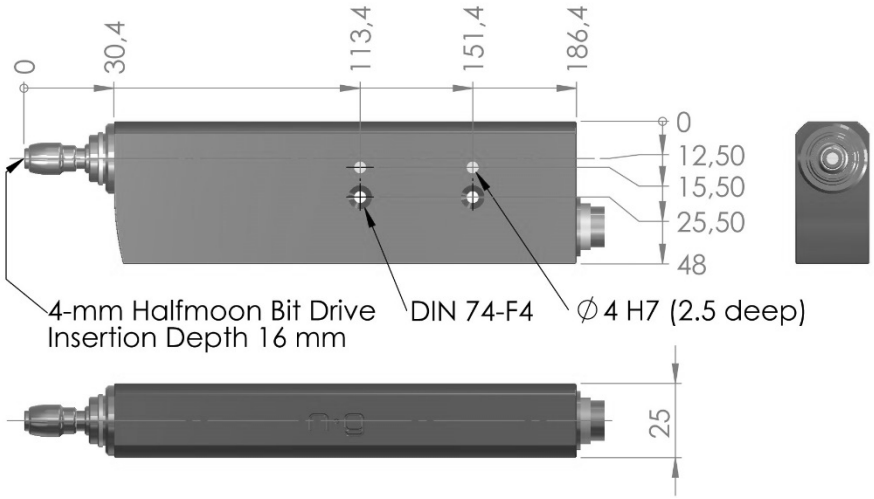

ng-TDS05-hi
ng-TDS10-hi
ng-TDS20-hi
ng-TDS50-hi
ng-TDSQ10-hi
ng-TDSQ20-hi

ng-TDS05-hu
ng-TDS10-hu
ng-TDS20-hu
ng-TDS50-hu
ng-TDSQ10-hu
ng-TDSQ20-hu

Weight: 0,47 kg

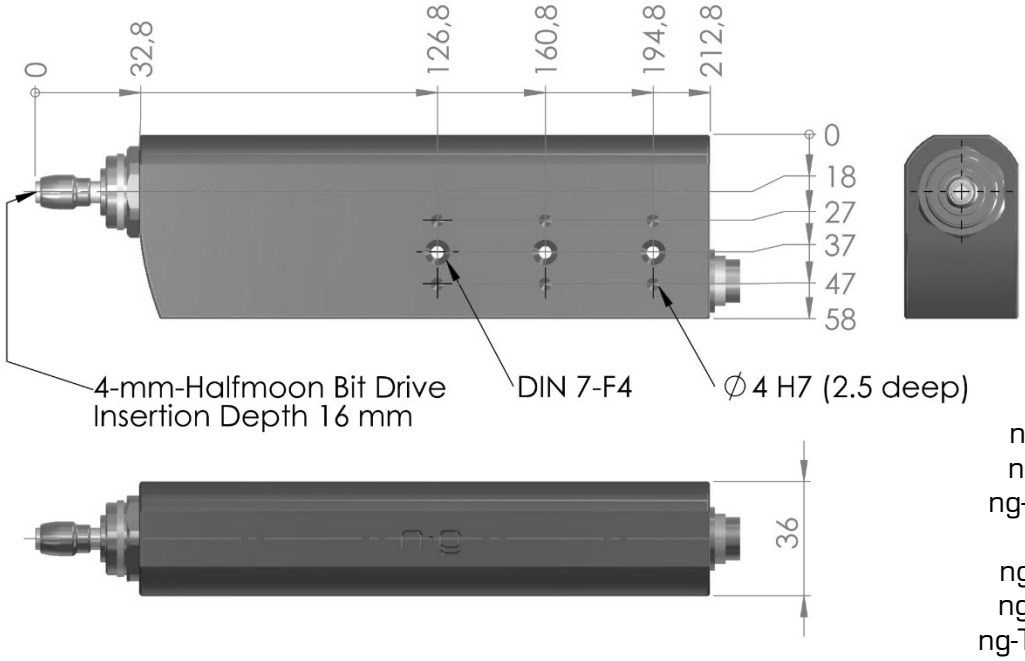

ng-TDS100-hi
ng-TDSQ50-hi
ng-TDSQ100-hi

ng-TDS100-hu
ng-TDSQ50-hu
ng-TDSQ100-hu

Weight: 0,98 kg

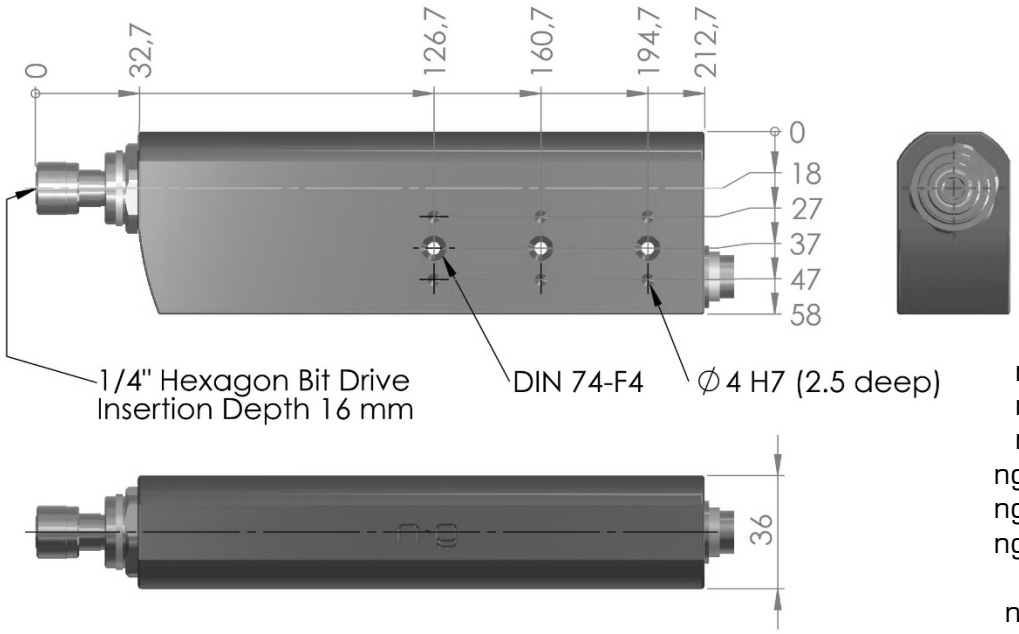

ng-TDS200-xi
ng-TDS400-xi
ng-TDS500-xi
ng-TDSQ200-xi
ng-TDSQ400-xi
ng-TDSQ500-xi

ng-TDS200-xu
ng-TDS400-xu
ng-TDS500-xu
ng-TDSQ200-xu
ng-TDSQ400-xu
ng-TDSQ500-xu

Weight: 0,98 kg

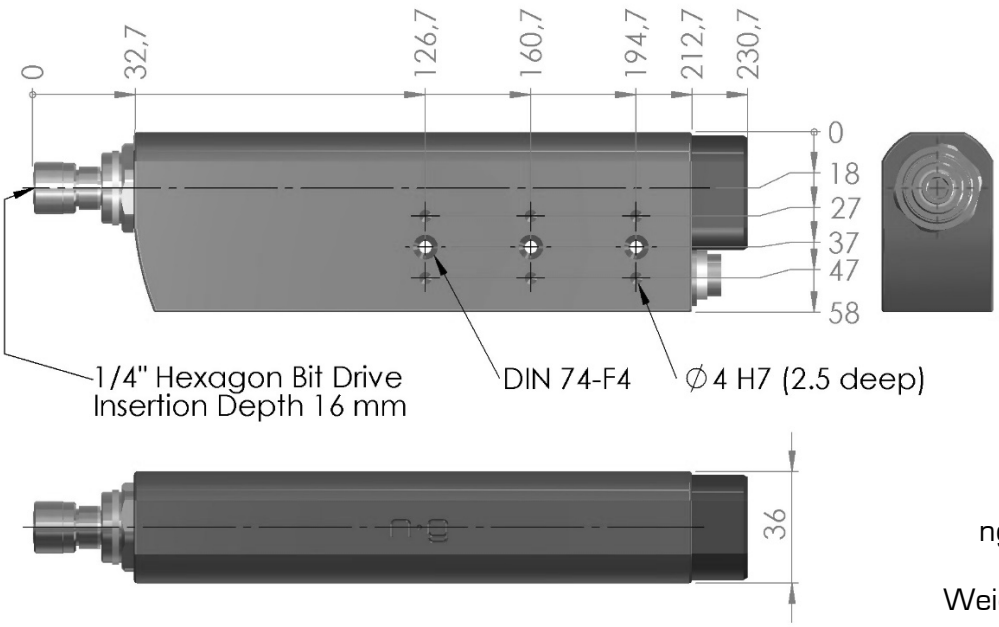

ng-TDS600-xi

Weight: 1,15 kg

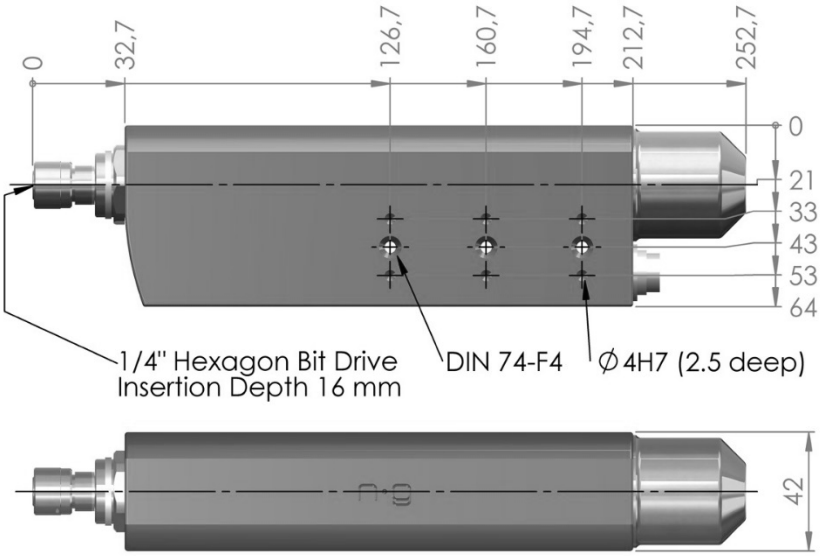

ng-TDS1000-xi

Weight: 1,75 kg

5 Systems and Components for Automated Assembly

5.1 Blow Feeding Module ng-BF400

The blow feeding module is designed for highly effective automated screw tightening applications. It is built of the following components:

- Fixture unit, prepared for mounting of the module at a robot (e. g. a SCARA or Cartesian Robot)
- Pneumatic precision slide for the driver stroke
- Mouthpiece Assembly with bracket set

The screws are blown from the screw feeder unit through a tube into the mouthpiece. They are stopped by the spring balanced brackets in alignment with the screw driver spindle. The tightening process begins, when the spindle moves downwards pushing the screw through the brackets towards the workpiece while rotating slowly.

The mouthpiece and the brackets sets are designed and manufactured in accordance with the geometric requirements of the parts and screws.

The module is prepared to carry the torque driver types

- ng-TDS50-hi
- ng-TDS100-hi
- ng-TDS200-xi
- ng-TDS400-xi
- ng-TDS500-xi
- ng-TDS600-xi

The total weight of the unit, including the torque driver spindle is approximately 2.0 kg.

The modules are based on a standard design. Most ot the time, customization of application specific parts is necessary. It can be done on request after a profound technical clarification.

5.2 „Flying Handling“ Module ng-FLH400

The Pick-&-Place feeding module is designed for highly effective automated screw tightening applications. It is built of the following components:

- Fixture Plate, prepared for mounting of the module at (e. g.) a Cartesian robot
- Pneumatic precision slide for the driver stroke
- Screw handling assembly with vertical / horizontal movements via pneumatic precision slides

While the screw is being tightened, the next screw can be blown into a little dome mounted in the screw handling. When the screw driver spindle has moved back into the upper position, the handling brings the screw to the vacuum nozzle, then it moves back into the loading position. This can happen while the robot moves to the next screw joint position. The process time is significantly shorter than with the normal Pick-&-Place.

The vacuum adapter assembly with the nozzle is attached to the torque driver spindle.

The module is prepared to carry the torque driver types

- ng-TDS50-hi
- ng-TDS100-hi
- ng-TDS200-xi
- ng-TDS400-xi
- ng-TDS500-xi
- ng-TDS600-xi

The screw spindle is equipped with a vacuum adapter (see 6.8) for sucking the screw.

The total weight of the unit, including the torque driver spindle is approximately 3.4 kg.

The modules are based on a standard design. Most ot the time, customization of application specific parts is necessary. It can be done on request after a profound technical clarification.

6 Accessories

6.1 Sensor Interface ng-TC-ai

Intelligent sensor interface with analog input for torque and force sensors based on strain gauges

- Sampling-rate 2 kHz / 4 kHz
- Signal-LED
- Aluminum casing
- Operating temperature 0 °C bis +40 °C (+32 °F to 104 °F)
- Dimensions 50 x 50 x 30 mm

- Interface Option 1:
  - USB
  - Ethernet
  - *ng-Link*

Type	Description	Article Number
ng-TC-ai	Sensor interface for sensors based on strain gauges	01-01-00001-01
ng-TC-ai-5	Sensor interface for voltage input 0 – 5 V	01-01-00597-01
ng-TC-ai-10	Sensor interface for voltage input 0 – 10 V	01-01-00598-01

- Interface Option 2:
  - USB
  - Ethernet
  - Encoder

Type	Description	Article Number
ng-TC-ai-e	Sensor interface for sensors based on strain gauges and encoder	01-01-00599-01
ng-TC-ai-5-e	Sensor interface for voltage input 0 – 5 V and encoder	01-01-00600-01
ng-TC-ai-10-e	Sensor interface for voltage input 0 – 10 V and encoder	01-01-00601-01

6.2 Interface Extension ng-eTTx

For all intelligent torque and force sensors with *ng-Link* interface

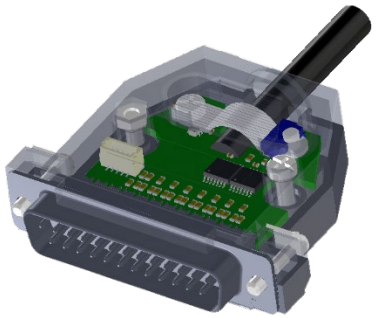

Article Number	Type
01-01-00152-01	ng-eTTx, Cable 1,8 m
01-01-00573-01	ng-eTTx, Cable 5,0 m

- 8 isolated digital Inputs, NPN or PNP configurable, voltage range 12 – 36 V
- 8 isolated digital Outputs, NPN or PNP configurable, voltage range 12 – 36 V
- Supply voltage 24 V DC 1 A (sensor consumption included)
- Direct signalizing of control window status
- Integrated in a SUB-D-25 housing
- Connector compatible to the *ng-Link* interface
- Cable length 1.8 m or 5,0 m

6.3 Mounting Assy

Prepared for ng-TTR-Series **ng-TTR01-ci** to **ng-TTR5000-qi**

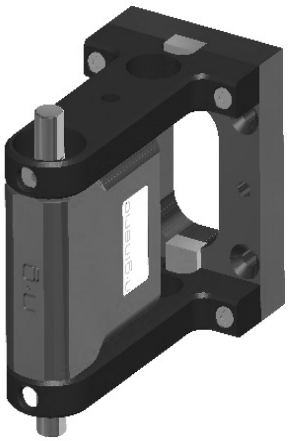

Article Number	Type
01-01-00163-01	Diameter 19 mm
01-01-00226-01	Diameter 20 mm

6.4 Screw Joint Simulator Sets

Type	Drive	Screw Size	Torque Range	Article Number
ng-SJS Set 3 mm CYL M1	3 mm Cylindric	M1	0.5 – 2.5 cNm	01-92-00019-01
ng-SJS Set 3 mm CYL M1.6	3 mm Cylindric	M1.6	2 - 10 cNm	01-92-00020-01
ng-SJS Set 3 mm CYL M2	3 mm Cylindric	M2	4 - 20 cNm	01-92-00002-01
ng-SJS Set 1/4" HEX M2	1/4" Hexagon	M2	4 - 20 cNm	01-92-00014-01
ng-SJS Set 1/4" HEX M3	1/4" Hexagon	M3	16 - 80 cNm	01-92-00001-01
ng-SJS Set 1/4" HEX M4	1/4" Hexagon	M4	0.4 - 2 Nm	01-92-00003-01
ng-SJS Set 1/4" HEX M5	1/4" Hexagon	M5	1 - 5 Nm	01-92-00013-01
ng-SJS Set 1/4" HEX M6	1/4" Hexagon	M6	1.6 - 8 Nm	01-92-00004-01
ng-SJS Set 1/4" HEX M8	1/4" Hexagon	M8	3 - 15 Nm	01-92-00006-01
ng-SJS Set 3/8" SQR M6	3/8" Square	M6	1.6 - 8 Nm	01-92-00027-01
ng-SJS Set 3/8" SQR M8	3/8" Square	M8	3 - 15 Nm	01-92-00028-01
ng-SJS Set 3/8" SQR M10	3/8" Square	M10	6 - 30 Nm	01-92-00029-01
ng-SJS Set 1/2" SQR M8	1/2" Square	M8	3 - 15 Nm	01-92-00030-01
ng-SJS Set 1/2" SQR M12	1/2" Square	M12	10 - 50 Nm	01-92-00012-01
ng-SJS Set 3/4" SQR M16	3/4" Square	M16	30 - 150 Nm	01-92-00031-01
ng-SJS Set 3/4" SQR M24	3/4" Square	M24	80 - 400 Nm	01-92-00032-01
ng-SJS Set 1" SQR M24	1" Square	M24	80 - 400 Nm	01-92-00033-01
ng-SJSP Set 1/2" SQR M8 (*)	1/2" Square	M8	4 - 20 Nm	01-92-00047-01
ng-SJSP Set 1/2" SQR M12 (*)	1/2" Square	M12	16 - 80 Nm	01-92-00046-01
ng-SJSP Set 1/2" SQR M14 (*)	1/2" Square	M14	30 - 150 Nm	01-92-00049-01
ng-SJSP Set 3/4" SQR M16 (*)	3/4" Square	M16	50 - 250 Nm	01-92-00048-01
ng-SJSP Set 3/4" SQR M24 (*)	3/4" Square	M24	120 - 600 Nm	01-92-00045-01

(*) Screw joint simulator for torque measurement of hydraulic or electrical pulse tools.

6.5 Torque Driver Controller Interface ng-TDC

The Digital Interface Extension **ng-TDC** for Torque Driver Spindles **ng-µTDH-_i, ng-TDH-_i** and **ng-TDS-_i** can manage 48 screw tightening programs which can be addressed directly via digital I/Os. Additional interfaces provide versatile connectivity to external controls.

Article Number	01-01-00220-01
Interfaces	12 photo isolated digital inputs, NPN/PNP configurable, 24 V DC 8 photo isolated digital outputs, NPN/PNP configurable, 24 V DC USB-Interface Ethernet-Interface (10/100 Mbit) Modbus-TCP RS-232-C Open Protocol
Dimensions	105 x 84 x 46 mm
Weight	0.3 kg

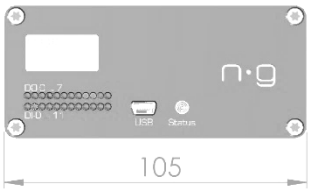

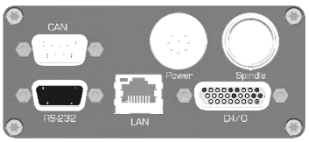

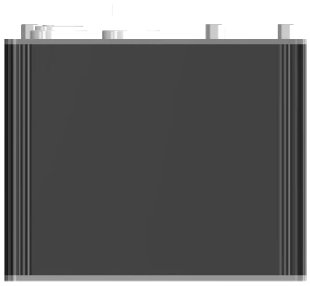

6.6 Program selector switch ng-TD-PSW16

The program selector switch **ng-TD-PSW16** is suitable for n-gineric screwing systems that are equipped with the screw controller **ng-TDC**. It allows the external manual selection of the desired tightening program via a rotary switch with 16 positions. It´s connected to the digital I / O interface of the **ng-TDC**.

- Selection of program 1 bis 16
- Cable length 1.8 m
- Connector: SUB-D-26-HD

Article Number	01-90-00101-01

6.7 Carbon Telescopic Arm ng-TA900

The telescopic support arm made of carbon fibers absorbs the reaction torque of the screw drive. It reduces the workload when screwing and at the same time prevents incorrect measurements of the angle of rotation during the screwing process.

It is attached to the workplace using a bracket and, thanks to its smooth operation, ensures optimal freedom of movement in the room.

Characteristics:

- Extension path: 460 - 950 mm (usable max. 900 mm)
- Maximum torque load: 12 Nm
- retaining clip

Article Number	01-01-00544-01

6.8 Linear-Arm with position monitoring ng-LAP

Device holder with vertical linear guide and two hinge axes

- Horizontal travel 400 mm, 450 mm or 500 mm radial
- Vertical travel 300 mm or 560 mm

The arms have a solid profile construction with a double ball roller guide mounted behind it, which guarantee a smooth running in the Z direction.
The joint axes are double-supported, and the bearing clearance is setting precisely. This setup guarantees a massive improvement in positioning repeatability and handling.
The joint axes are equipped with high-resolution position sensors whose signals are read out via the **ng-PBC** bit selector and screw position controller.

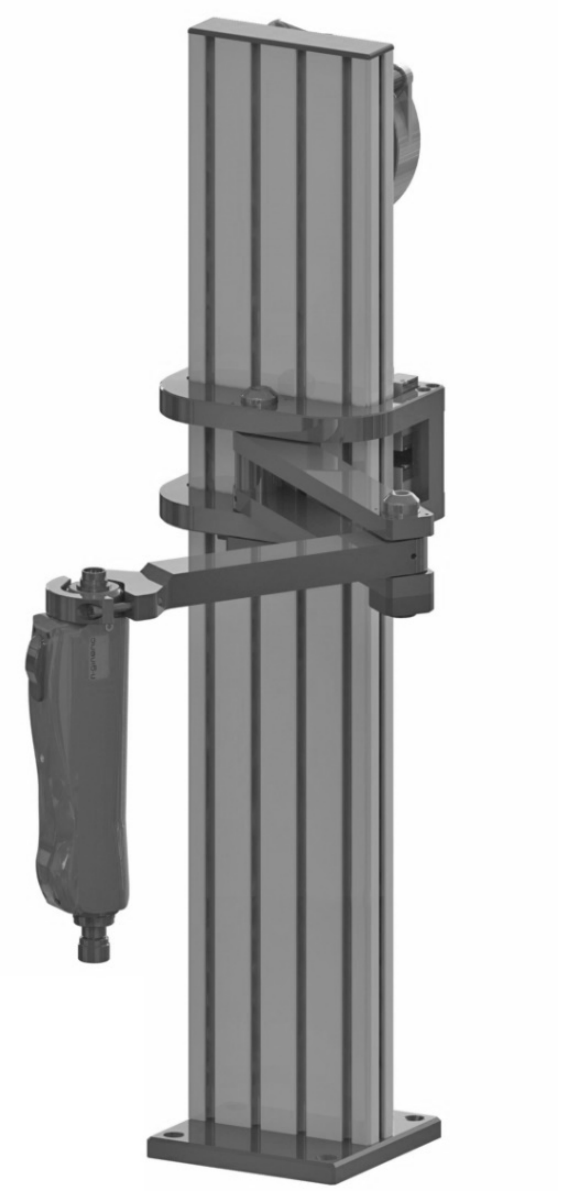

ng-LAP with position monitoring sensors

Type	Description	Article Number
ng-LAP400 Height 640 mm	Vertical Travel 300 mm	01-01-00451-01
ng-LAP400L Height 900 mm	Vertical Travel 560 mm	01-01-00672-01
ng-LAP450 Height 640 mm	Vertical Travel 300 mm	01-01-00682-01
ng-LAP450L Height 900 mm	Vertical Travel 560 mm	01-01-00683-01
ng-LAP500 Height 640 mm	Vertical Travel 300 mm	01-01-00680-01
ng-LAP500L Height 900 mm	Vertical Travel 560 mm	01-01-00684-01

The linear arm is also available without position monitoring sensors

ng-LA

Type	Description	Article Number
ng-LA400 Height 640 mm	Vertical Travel 300 mm	01-01-00453-01
ng-LA400L Height 900 mm	Vertical Travel 560 mm	01-01-00685-01
ng-LA450 Height 640 mm	Vertical Travel 300 mm	01-01-00681-01
ng-LA450L Height 900 mm	Vertical Travel 560 mm	01-01-00686-01
ng-LA500 Height 640 mm	Vertical Travel 300 mm	01-01-00679-01
ng-LA500L Height 900 mm	Vertical Travel 560 mm	01-01-00687-01

Dimensions:

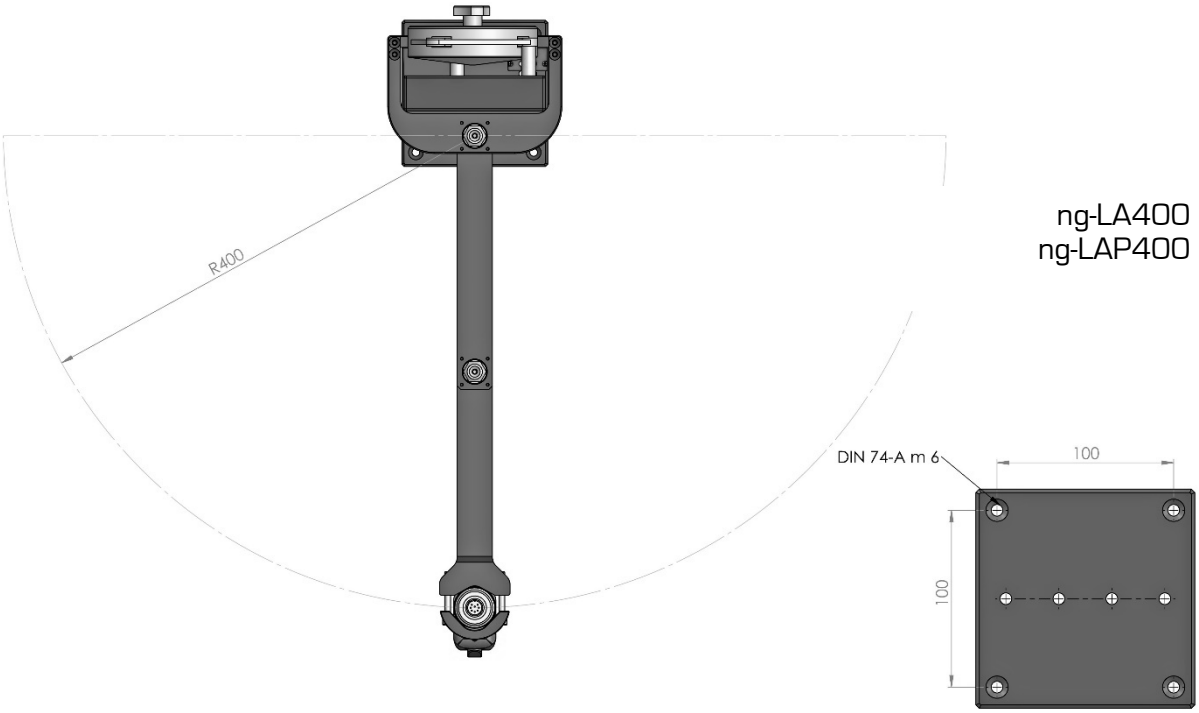

ng-LA400
ng-LAP400

6.9 Bit Selector and Tightening Position Controller ng-BPC

The **ng-BPC** device was designed to control the bit change within the screw tightening sequence as programmed in the **n-quirer TD advanced** application. The operater is requested to change the bit by Pick-by-Light signals.

Additionally, with the position sensors of a device holder connected, the system can also ensure that the screw tightening sequence is done according to the programmed tightening coordinates.

Article Number	01-01-00400-01

6.10 Foot Switch ng-Tx-FSW

The footswitch **ng-Tx-FSW** can be used as an external operating element for the **n-quirer TT** and **n-quirer TD** application. It is connected to the PC running the software via USB. The following functions are available:

- External measurement triggering (**n-quirer TT**)
- Quick graph export into Excel format (for multi-graph collection) (**n-quirer TT**)
- Start of the screw tightening process (**n-quirer TD**)

Conector: USB-A, cable length 2.5 meters

Article Number	01-90-00034-01

6.11 Barcode Reader wireless ng-BCR

The barcode reader can be used in conjunction with the **n-quirer TT** and **n-quirer TD** software for the following functions:

- Load measurement or sequencer programs
- Identification of tools
- Identification and assignment of workpieces

Article Number	01-80-00019-01

6.12 Cables

Type	Description	Article Number
ng-TTR > PC		
Cable USB-A/USB Mini-B 2.0 m	ng-TTR/USB-Cable 2 meters	01-90-00002-01
Cable USB-A/USB Mini-B 5.0 m	ng-TTR/USB-Cable 5 meters	01-90-00006-01
Cable USB-Mini/USB-Type C, 1.0 m	USB-Mini/USB-Type C, 1 meter	01-90-00035-01
Cable USB-Mini/USB-Type C, 5.0 m	USB-Mini/USB-Type C, 5 meters	01-90-00103-01
ng-eTTR > PC		
Cable ng-eTTR/USB-A 1.8 m	ng-eTTR /USB-Cable 1.8 meters	01-90-00008-01
Cable ng-eTTR/USB-A 5.0 m	ng-eTTR /USB-Cable 5 meters	01-90-00023-01
Cable ng-eTTR/USB-Type C 1.8 m	ng-eTTR/USB-Type C, 1.8 meters	01-90-00039-01
Cable ng-eTTR/USB-Type C 5.0 m	ng-eTTR/USB-Type C, 5 meters	01-90-00105-01
Cable ng-Link 1.8 m	*ng-Link*-Cable for sensor connection	01-90-00012-01
Cable ng-Link 5.0 m	*ng-Link*-Cable for sensor connection	01-90-00040-01
ng-TD-Cable 2.0 m	Driver Cable 2 meters	01-90-00011-01
ng-TD-Cable 3.0 m	Driver Cable 3 meters	01-90-00014-01
ng-TD-Cable 5.0 m	Driver Cable 5 meters	01-90-00022-01
Power Cord ng-PSC-EU	Power Cord Europe	01-90-00028-01
Power Cord ng-PSC-CH	Power Cord Switzerland	01-90-00029-01
Power Cord ng-PSC-US	Power Cord USA	01-90-00030-01
Power Cord ng-PSC-GB	Power Cord England	01-90-00031-01
Power Cord ng-PSC-CN	Power Cord China	01-90-00032-01

Driver Cable

USB Cable

Power Cord

6.13 Power Supply Units

Type	Description	Article Number
ng-TD-PS-15-40	Power Supply Unit 15 V 40 VA	01-91-00007-01
ng-TD-PS-24-80	Power Supply Unit 24 V 80 VA	01-91-00006-01
ng-TD-PS-36-600	Power Supply Unit 36 V 600 VA	01-91-00004-01

ng-TD-PS-15-40, ng-TD-PS-24-80

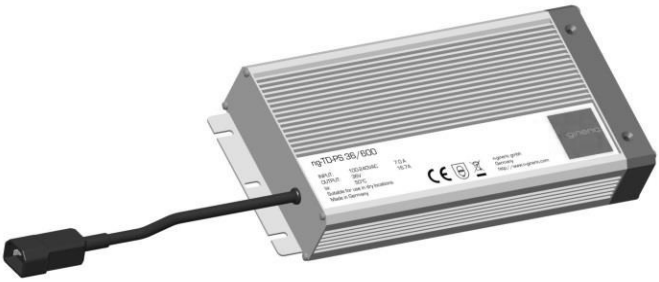

ng-TD-PS-36-600

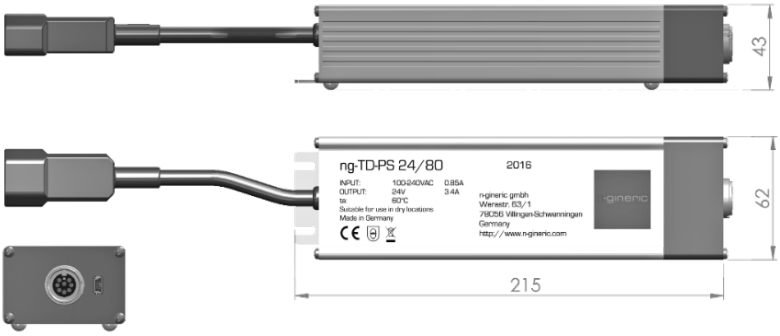

ng-TD-PS-15-40
ng-TD-PS-24-80

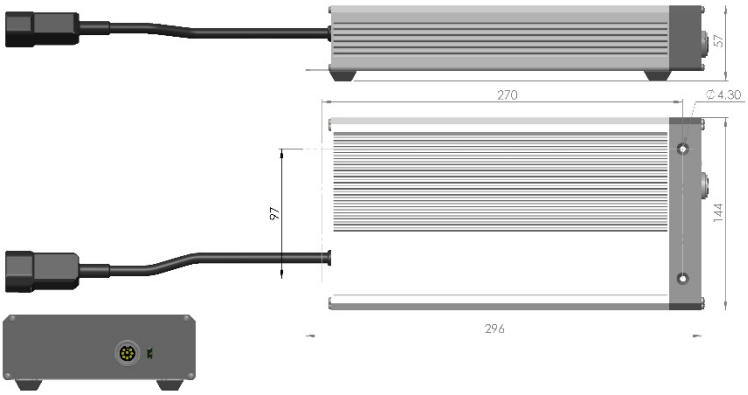

ng-TD-PS-36-600

6.14 Vacuum Adapter Assemblies

Vacuum Adapter Assemblies for Micro Sensor Torque Driver Spindles **ng-TD** are available in different sizes. They are selected according to the driver size, the screw geometry and possible constraints of the workpiece. Sometimes customizing can be necessary. The vacuum nozzle is not included.

Type	Article Number
ng-TD20-h44 Vacuum Adapter Assy D6	30-01-00032-01
ng-TD100-h44 Vacuum Adapter Assy D6	30-01-00035-01
ng-TD100-h64 Vacuum Adapter Assy D6	30-01-00034-01
ng-eTD100-x Vacuum Adapter Assy HEX50-D6	30-01-00059-01
ng-TD200-x Vacuum Adapter Assy D6	30-01-00033-01
ng-TD200-x Vacuum Adapter Assy D8	30-01-00029-01
ng-TD200-x Vacuum Adapter Assy D10	30-01-00030-01

6.15 Vacuum Nozzles

Vacuum nozzles for **ng-TD** are available in different standard sizes. They can be customized according to the screw geometry and possible constraints from the workpiece.

6.16 Screw Bits

Bits for Micro Sensor Torque Driver Systems **ng-TD** are available from various manufacturers, with 4-mm- Halfmoon drive or ¼" Hexagon drive. They are selected according to the screw tightening application requirements. They can be customized, if needed, especially for automated screw tightening systems.

Bit with 4-mm-Halfmoon Drive

Bit with ¼" Hexagon-Drive

6.17 Chuck Adapter Assy HM4–f-HEX6.35-m

Chuck Adapter Assy for screwdriver spindles with half-moon bit holder, for the use of bits with ¼ "hexagon drivers.

Article Number	01-01-00483-01

6.18 Calibration Assy

Prepared for ng-TTR-Series **ng-TTR50-x** to **ng-TTR2000-x**
and ng-eTTR-Series **ng-eTTR200-x** to **ng-eTTR2000-x**

For the comparative measurement of the torque and angle,

consisting of:

- Mounting block of anodized aluminum
- Simulator assembly with 4 cup springs
- Adapter with external thread included ¼" hexagon
- Optional: Assembly with internal thread

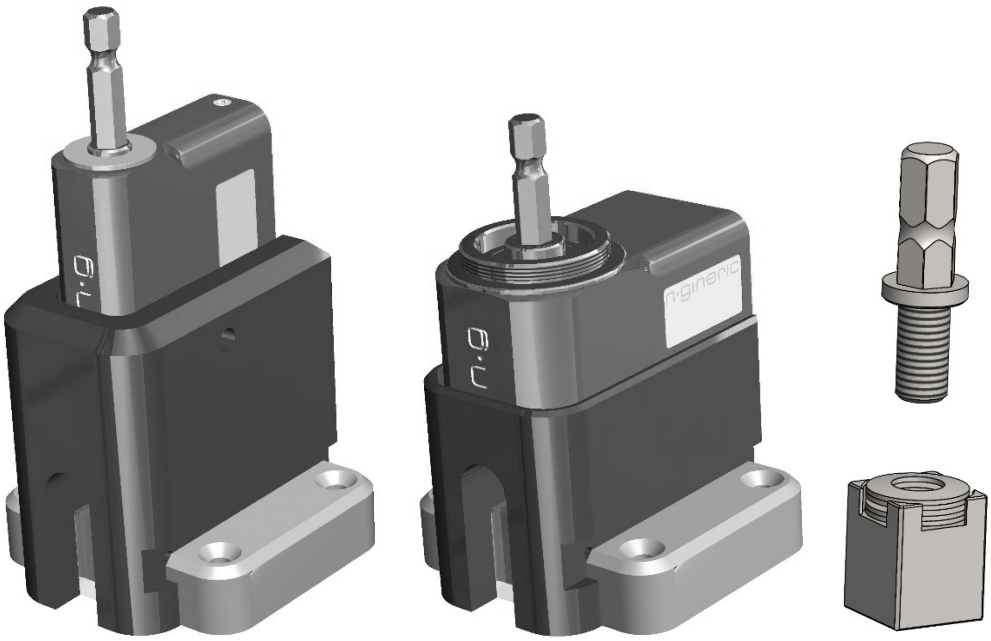

Type	Description	Article Number
ng-TACR2000-M3	Calibration rig M3 with accessories	01-01-00661-01
ng-TACR2000-M3.5	Calibration rig M3.5 with accessories	01-01-00662-01
ng-TACR2000-M4	Calibration rig M4 with accessories	01-01-00663-01
ng-TACR2000-M5	Calibration rig M5 with accessories	01-01-00636-01
ng-TACR2000-M6	Calibration rig M6 with accessories	01-01-00664-01
ng-eTACR2000-M3	Calibration rig M3 with accessories	01-01-00665-01
ng-eTACR2000-M3.5	Calibration rig M3.5 with accessories	01-01-00666-01
ng-eTACR2000-M4	Calibration rig M4 with accessories	01-01-00667-01
ng-eTACR2000-M5	Calibration rig M5 with accessories	01-01-00668-01
ng-eTACR2000-M6	Calibration rig M6 with accessories	01-01-00669-01

Dimensions:

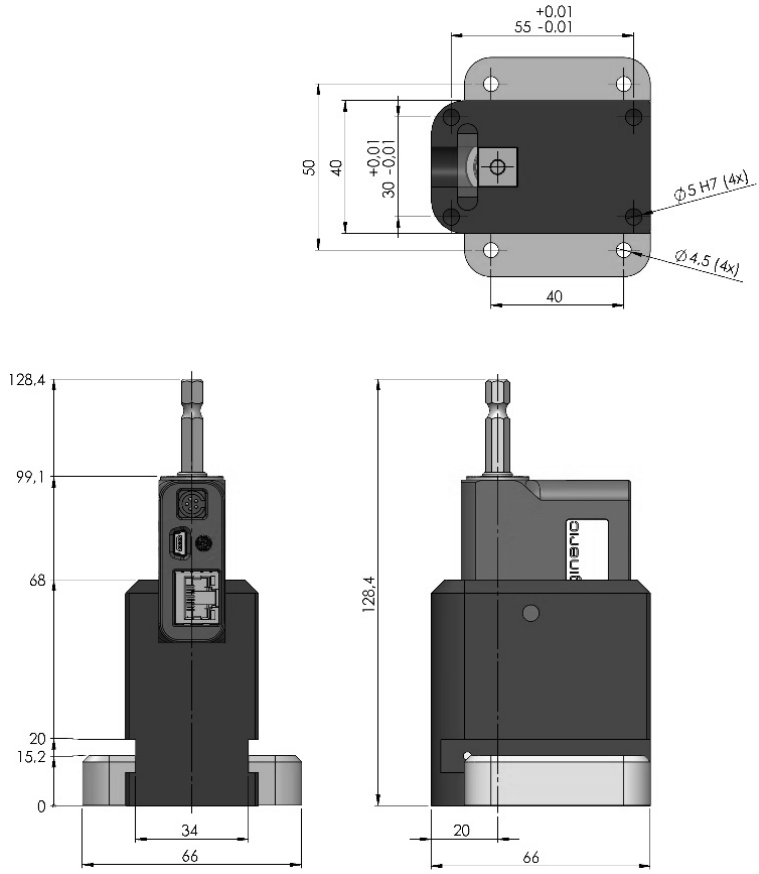

ng-TACR2000-M3
ng-TACR2000-M3.5
ng-TACR2000-M4
ng-TACR2000-M5
ng-TACR2000-M6

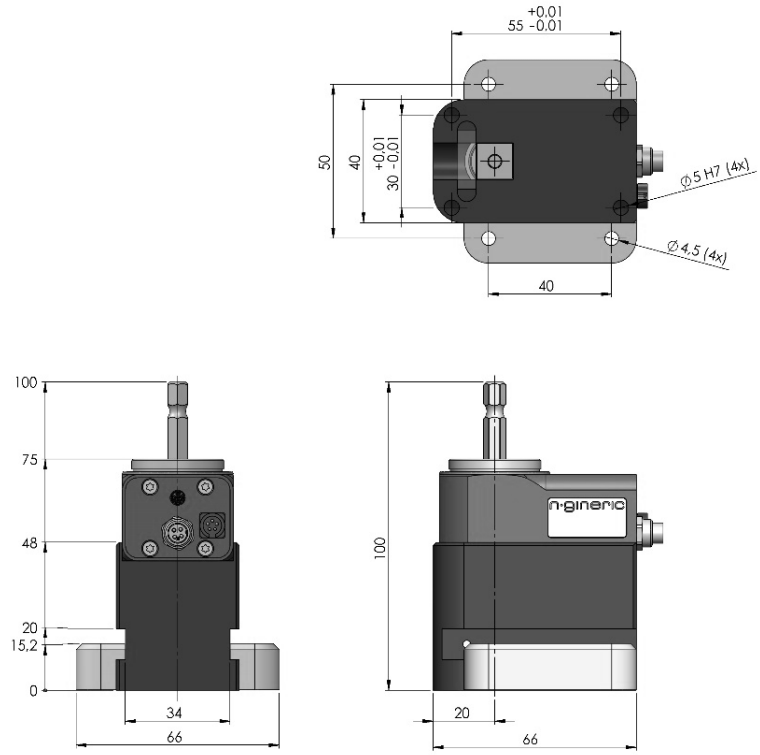

ng-eTACR2000-M3
ng-eTACR2000-M3.5
ng-eTACR2000-M4
ng-eTACR2000-M5
ng-eTACR2000-M6

n-gineric

Systems and Components designed and made in Germany.

© n-gineric gmbh
All rights reserved.

n-gineric GmbH
Im Martelacker 12
79588 Efringen-Kirchen
Germany